WHC-SA-2403-FP

308 Building Zone I Stabilization and Confinement

I. L. Metcalf
K. E. Schwartz
J. W. Rich
M. W. Benecke
G. W. Lanham

Date Published
August 1994

To Be Presented at
6th Annual Meeting on
Robotics and Remote Systems
Monterey, California
February 5-10, 1995

Prepared for the U.S. Department of Energy
Office of Environmental Restoration and
Waste Management

Westinghouse Hanford Company P.O Box 1970 Richland, Washington

Hanford Operations and Engineering Contractor for the
U.S. Department of Energy under Contract DE-AC06-87RL10930

Copyright License By acceptance of this article, the publisher and/or recipient acknowledges the U.S. Government's right to retain a nonexclusive, royalty-free license in and to any copyright covering this paper.

Approved for Public Release

MASTER

DISTRIBUTION OF THIS DOCUMENT IS UNLIMITED

DISCLAIMER

This report was prepared as an account of work sponsored by an agency of the United States Government. Neither the United States Government nor any agency thereof, nor any of their employees, make any warranty, express or implied, or assumes any legal liability or responsibility for the accuracy, completeness, or usefulness of any information, apparatus, product, or process disclosed, or represents that its use would not infringe privately owned rights. Reference herein to any specific commercial product, process, or service by trade name, trademark, manufacturer, or otherwise does not necessarily constitute or imply its endorsement, recommendation, or favoring by the United States Government or any agency thereof. The views and opinions of authors expressed herein do not necessarily state or reflect those of the United States Government or any agency thereof.

DISCLAIMER

Portions of this document may be illegible in electronic image products. Images are produced from the best available original document.

I. L. Metcalf
Westinghouse Hanford Company
PO Box 1970 L6-18
Richland, WA 99352
(509) 376-7675; fax (509) 376-1045

K. E. Schwartz
Westinghouse Hanford Company
PO Box 1970 N1-40
Richland, WA 99352
(509) 376-9851; fax (509) 376-1045

J. W. Rich
Westinghouse Hanford Company
PO Box 1970 N1-40
Richland, WA 99352
(509) 376-3890; fax (509) 376-1045

M. W. Benecke
Westinghouse Hanford Company
PO Box 1970 N1-40
Richland, WA 99352
(509) 376-0002; fax (509) 376-4331

G. W. Lanham
Westinghouse Hanford Company
PO Box 1970 N1-40
Richland, WA 99352
(509) 376-3845; fax (509) 376-1045

308 BUILDING ZONE I STABILIZATION AND CONFINEMENT

ABSTRACT

The 308 Building located on the Hanford Site near Richland, Washington, is currently in transition to shutdown status. After this transition is complete, the facility will be maintained/surveilled and given to the U.S. Department of Energy Office of Facility Transition and Management (EM-60) for utilization, remedial action, or decontamination and decommissioning (D&D). This may require that the facility be maintained in the shutdown status for as long as 30 yrs. To date, all of the special nuclear material (SNM) has been removed, potential fuel supply equipment preserved, surplus materials and equipment excessed, and enclosure cleanup and stabilization completed. A major activity in support of the 308 Building shutdown was the cleanup and stabilization of the enclosures and surface contamination areas.

This document discusses the specific designs, processes, and methods used to stabilize and confine the radiological material within the enclosures and exhaust ducts to allow the shutdown of the active support systems. The process and designs employed were effective, yet simple, and maximized the use of current technologies and commercial products.

I. INTRODUCTION AND OBJECTIVES

The 308 Laboratory contains 56 radiological enclosures that are contaminated with radioisotopes resulting from their use in reactor fuels research and/or fabrication.

Essentially all of the gloveboxes contain residual plutonium oxide contamination. These enclosures and internal large equipment items will remain in place in the facility and be removed at remediation or D&D.

The facility shutdown plan outlines the following workscope related to the contaminated equipment and stabilization task.

- Removal of small loose equipment items
- Draining all process fluids from equipment that will not be removed
- Removal of glovebox waste materials
- Coating the internal surfaces with a fixative coating
- Replacement of the associated in-glovebox high-efficiency particulate air (HEPA) filters
- Installing seals/port covers over glovebox ports
- Isolating the glovebox primary confinement exhaust system from the exhaust stack and a passive vent provided within the building
- Termination of all nonessential energy sources.

This document describes the specific designs, processes, and methods used for stabilization of the radiological material within the enclosures, compartmentization, and confinement that allowed shutdown of the active support systems. Also presented are the post-process evaluation and lessons learned.

II. STABILIZATION -- CONFINEMENT PROCESS

A combination of steps were taken to stabilize/ compartmentize the remaining radiological materials within the Zone I (enclosure exhaust) system and provide appropriate confinement to allow for the shutdown of the active exhaust system. A phased and systematic approach was taken to enhance the safety posture and effectiveness during the transition from previous operations to complete system shutdown.

A. Reduction of Radiological Material to Minimum Levels

Efforts were in progress for a number of years to reduce the inventory of Special Nuclear Material (SNM), waste, and hazardous material from the facility. Category I, II, and III SNM have been removed. Based on a recent nondestructive assay of the gloveboxes and exhaust ducts, only ~21 g of plutonium are held up in the ducts and ~374 g of plutonium in the gloveboxes.

A further reduction of the glovebox values was achieved during performance of the final cleanup. Subsequent to the initial cleanup and analysis, a nondestructive analysis (NDA) of the waste containers removed from the facility was performed. The NDA determined that an additional 69 g of plutonium was removed during this cleanup, further reducing the hazard posed by the facility.

B. Stabilization of Residual Materials to Maximum Extent Possible

After the enclosures (gloveboxes and hoods) were cleaned to the maximum extent possible, the residual materials were fixed by coating the inside surfaces as necessary. At the connection between the enclosures and ducts, new HEPA filters were installed (if necessary) to further reduce residual materials and compartmentize the radiological materials in their present locations. The interior of the enclosures were coated with Polymeric Barrier System™ (PBS) to fix any remaining loose material. (The HEPA filters were protected during the application process.)

C. Provide Additional Confinement Features to Allow Changes From Active Systems to Passive Systems

Reliance on active systems has a greater risk potential due to a higher probability of component failure. They also require additional resources and operating cost. The subject radiological materials were first minimized and stabilized and then the enclosure openings (glove ports, bag ports, etc.) covered with rigid covers and the exhaust blanked off between the last stage of HEPA filters and the exhaust fans. This allowed shutdown of the active ventilation systems and corresponding monitoring systems. The contaminated ducting and enclosure system will be able to equalize pressure with the building via a HEPA-filtered passive vent. The equalization HEPA filter was connected to the existing exhaust duct. Based on historical and process knowledge, this section of duct, including its corresponding first stage testable HEPA filter located in the filter tunnel, is very clean. This will allow the enclosure-duct system to adjust to temperature-related pressure changes, but, at the same time, provide confinement and allow the active heating, ventilation, and air conditioning (HVAC) system to be eliminated.

The principle confinement barriers are the metal enclosures and ducting system, which provide adequate confinement as-is. Potential leak paths such as glove ports, bag ports, window gaskets, service penetrations, gaskets, etc., required additional barriers to ensure confinement over the extended surveillance period. A combination of methods were used to form barriers to prevent migration of materials from inside the enclosures and ducting to the exterior. Migration will be prevented with the use of room temperature vulcanizing (RTV) caulking, heat shrink materials, PBS, tape, bags, and physical protection. The different barriers were used by themselves or in combination with other barriers.

After all the loose equipment was removed and the interior wiped down for the final time, the stabilization process was initiated. The stabilization process actually started on the exterior prior to interior coating to take advantage of the vacuum produced by the exhaust system. The vacuum possibly assisted by pulling the RTV caulking, PBS, and/or other sealants into any leak paths. Specific confinement features are as follows:

Flanges, bolts, gaskets on gloveboxes, and exhaust ducts. For flanges with a gasket and bolts, the exposed gasket, bolt head, and nut were treated. With respect to the exhaust ducting where internal stabilizing is not possible, the contamination is believed to adhere to the duct surfaces, the flanged areas were coated with PBS or other sealants (such as high-particle content latex paint). Select locations did not receive any external or internal stabilization because of limited access, equipment complexity, etc., but these areas were so noted in the stabilization documentation. This will allow for special attention, as appropriate, when periodic radiological surveys are performed..

Windows. For windows that use a combination of bolts (studs), washers, nuts, frames, and gaskets, the treatment consisted of using RTV to caulk the interface between the window face and the glovebox, and the window/gasket/window frame area. The above interfaces and the nuts that fasten the window frame to the glovebox wall were coated with high-particle content latex paint to seal the interface between the nuts and the frame.

Electrical penetrations.

- Interior junction boxes and electrical connectors were coated with PBS.
- Connector interior surfaces were similarly coated. Electrical wires were cut on the exterior side.
- Exterior connector surfaces were coated with RTV. RTV was also used to fill gaps in junction box seams.

Gas penetrations and valves.

- Inlet penetrations were plugged or capped where applicable. Sections of N_2 supply piping up to the first manually controlled valve were allowed to breathe with the glovebox.
- The gasket, nut/bolt, and flange regions were coated with high-particle content latex paint. Gasket configurations that are concave were first sealed with RTV.

Ports. After the interiors of the gloveboxes were stabilized, the existing gloves or bags were removed and port bags installed using standard techniques. To provide physical protection, aluminum port covers were installed. Next, the covers were secured with shrink material having a heat-activated adhesive lining. This material also provided a tight fit and an additional barrier. This composite of barriers is shown in Figure 1.

Figure 1. Glovebox Port Seal Arrangement.

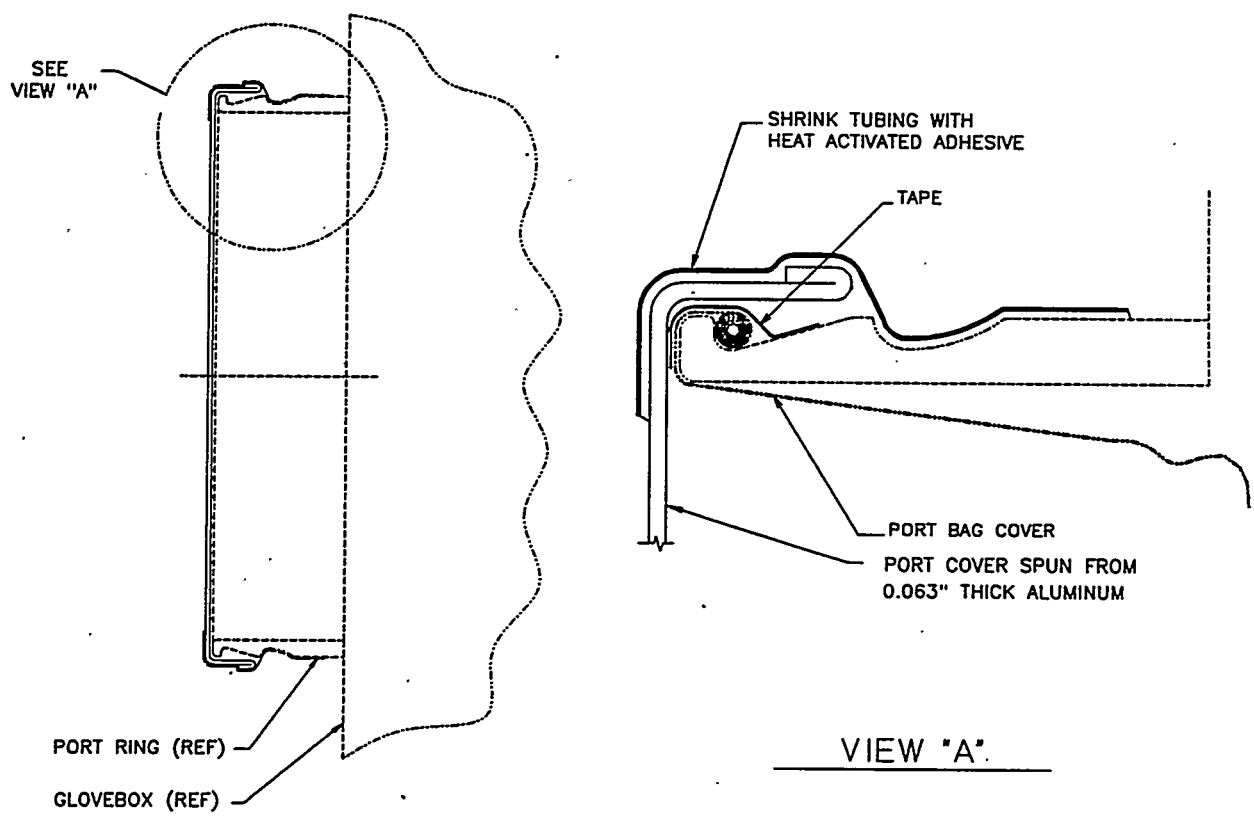

Open-faced hoods. Following wipedown, the interior surfaces of the hood were coated with PBS. Then the face panels were closed and the seams or joints caulked with RTV.

Enclosure exhaust vacuum regulators and air bleed HEPA filters. Each glovebox is provided with a vacuum regulator whose purpose is to control pressure in the glovebox by modulating the exhaust flow. A 1-in. (nominal) sense line is routed from the bottom of the valve operator diaphragm to the glovebox, and there is a slight potential for some radiological material to have accumulated inside the lower chamber of the valve operator. The upper chamber of the valve operator has an open air reference port with a small weather cap, which allows it to equalize pressure with the room. To ensure that the vacuum regulator is maintained in the open position during the layup of the gloveboxes (to allow the gloveboxes to breath), the actuator air reference port was maintained functional (open to the room).

A small HEPA filter with an isolation valve was originally provided on the bottom of each vacuum regulator to allow room air to enter upstream of the regulator seat to improve the pressure control stability of the regulator at low glovebox purge flow rates. Because the vacuum regulator is immediately downstream of the glovebox HEPA filter, some radiological material that passed through the first stage nontestable glovebox HEPA filter over the years could still be located in the bottom of the regulator valve where the air bleed HEPA filter is installed.

To stabilize this portion of the glovebox installation, the following actions were performed.

- The small air bleed HEPA filter isolation valves were closed, and a fabricated sheetmetal cover was installed over the HEPA filter and its housing.
- The weather cap was removed from the top of the vacuum regulator room air reference port and replaced with a small respirator HEPA filter using a fabricated adapter.
- All bolted connections on both the vacuum regulator valve and its actuator were coated with high-particle content latex paint.

Enclosure nitrogen gas/air supply vacuum breakers. A vacuum breaker valve is provided on the nitrogen gas/air supply to each glovebox. Because the direction of flow has always been maintained toward the gloveboxes, and because there has always been a HEPA filter at the interface between the ventilation supply and the gloveboxes, the potential for radiological material to have migrated into the valve body is small. These regulators, however, are also provided with a sense line to the valve actuator, which is common to the vacuum regulators. There is a potential that some radiological material could have migrated into the actuator. Unlike the vacuum regulators, there is no need that the actuator reference port be maintained open. The following actions were performed to stabilize the vacuum breaker valves.

- The weather cap was removed from the top of the vacuum breaker room air reference port and replaced with a pipe plug.
- All bolted connections on both the vacuum breaker valve and its actuator were coated with PBS or high-particle content latex paint.

First stage testable glovebox HEPA filters. Two (redundant) exhaust fans exhaust air from the gloveboxes and confinement hoods located in the Main Process Building through an exhaust discharge located on the side of the building. The exhaust streams from the gloveboxes and hoods are routed through two stages of testable HEPA filters (in addition to the nontestable HEPA filter located at each of the gloveboxes) before being exhausted to the atmosphere.

Essentially all radiological material that was able to penetrate the nontestable HEPA filter at each glovebox has been distributed in the ducts between the glovebox and the first stage testable HEPA filter, or is located in the first stage testable HEPA filter. Stabilization of the ducts and the gloveboxes has been discussed previously in this document. To stabilize the first stage testable HEPA filter, all mechanical joints in the first stage testable HEPA filter housing (including fasteners) were coated with high-particle content latex paint.

Seal traps. The glovebox exhaust system was originally provided with a seal trap to allow for draining of accumulated fire protection water upstream of the final stage HEPA filters. The seal trap was drained and a blank was installed at an existing flanged connection to isolate the glovebox ventilation ducts from the building ventilation system.

III. DISCUSSION

A. CRITERIA/FUNCTIONAL REQUIREMENTS

Described below are the major functions and requirements that were used for the stabilization/ confinement effort and how they were satisfied.

Minimize and stabilize radiological material with the enclosure system to maximum extent possible. Of the total 305 g of plutonium held up in the gloveboxes and other enclosures, 168 g is in the form of a very hard, rock-like compound caused by the gradual combination of hydraulic oil residue and oxide material (with organic binder) over the approximately 20-yr operating life of the facility. In the past, some of this material has been removed using a chisel to chip the material off the presses. Due to the nature of this material, it is considered to be nondispersible and, therefore, would not contribute to the dose that would result from a postulated accident.

The remaining 137 g plutonium in the gloveboxes are in the form of small particles of plutonium oxide that have adhered to surface imperfections and irregularities in the walls of the gloveboxes and remaining equipment. The gloveboxes were cleaned out and wiped down with damp rags to complete material recovery and accountability. After wipedown, the interior of the enclosures was coated with PBS. For the most part, this will fix most residual materials within the enclosure (only inaccessible locations were spared).

Following cleanout of the gloveboxes, the HEPA filters at the exit of each glovebox and the HEPA filters in the process area ventilation system were replaced, if required.

The 21 g of plutonium in the exhaust ducting are also assumed to be in the form of small particles, since it has passed through one stage of HEPA filtration at the glovebox exit. It is also assumed that material is also fairly well adhered to the walls of the ducting given the continuous airflow through the ducting has not caused the material to migrate. In any event, the HEPA filters at the enclosure exhaust will help confine the residual plutonium in the ducts. Sealing the duct flanges with paint will provide adequate protection.

In summary, the process and elements used will stabilize or confine any remaining radiological materials to the maximum extent possible.

Provide physical protection to normal and upset conditions. The enclosure systems (enclosure and ductwork) are constructed of substantial material and are capable of providing adequate physical protection consistent with any normal conditions and any upset conditions identified by the facility Safety Analysis Report (SAR). The only significant weakness was the glove and bagports. The protective covers outlined previously will provide the appropriate protection. Other enclosure system penetrations will received appropriate protection as outlined.

Thirty-year stabilization/confinement life. The protective measures outlined previously are believed to be capable of providing the degree of confinement and stabilization required for the desired lifetime based on material data available, experience, number of barriers, and the following:

- No active operations are planned that would alter initial protective measures
- No adverse environmental changes
- No exposure to outside weather conditions
- No significant exposure to UV radiation
- Maximum stabilization confinement of radiological material
- Low radiation dose rate (< 2 mrem/h)
- Routine surveillances.

Planned, periodic retrofitting permissible during system life. It is not possible to predict the full extent of degradation of the less substantial materials used to stabilize or confine the radiological material within the enclosure system. Appropriate, long-term, material data is just not available for some of the materials such as PBS, high-particle content latex paint, etc. Although our evaluation of these subject materials concluded that they will most likely meet the projected lifetime, a process will need to be in place to perform appropriate surveillance to verify the integrity of the protective feature.

Minimum surveillances during period prior to remediation or D&D. Surveillance during the period prior to remediation or D&D is essential from a good practice standpoint. At the same time, excessive surveillances result in increased costs, especially over the

projected time period. Accordingly, it was appropriate to provide sufficient barriers and means of inspection to reduce the extent of surveillances required. As described earlier, in most cases, there are several different barriers used that should be adequate. Although not currently defined, appropriate radiological surveys will need to be performed.

Maximum confinement, minimum contamination spread during D&D phase. The first objective was to confine the radiological material for the system life. At the same time, the features used must be compatible with the eventual removal of the enclosure and ducting system. One person's solution should not be the next person's nightmare. The approach taken was compatible with both. As discussed earlier, adequate confinement was provided consistent with appropriate surveillances and retrofitting (if necessary). As envisioned, appropriate radiological surveys would be taken prior to the removal process. Although unlikely, it should be assumed that barriers may fail. In any event, appropriate actions would be expected to further confine (i.e., additional shrink material, greenhouse, etc.) to allow removal and disposition. The approach taken should allow for the appropriate actions to be taken without undue remedial or D&D activities or resources.

Minimize application costs and resources. Safety is first, but total cost must be commensurate with the safety consideration. Fortunately, the process provides both. With respect to cost, the basic materials were commercially available, or, in the case of the metal port covers, were economical to fabricate. Installation and application of the components were also common and reasonable. Accordingly, the total cost was reasonable and did not require any special resources.

B. EVALUATION PROCESS/LESSONS LEARNED

A process was undertaken to determine an appropriate solution. This included team selection, a survey of existing materials and resources, identification and evaluation of existing techniques and practices, database searches, etc. With respect to the team, team members were selected from management, process engineering, process operations, and operating technicians. This provided a diverse resource with a broad spectrum of experience related to decision making, management, radiological experiences and practices, safety considerations, past failures, and extensive hands-on experience.

Naturally, existing components and designs were evaluated. With regard to port covers, various types are in use at the Hanford Site. However, all of these were intended for use with active ventilation systems and are expensive to fabricate. It was the consensus of the working group that a less expensive, more lightweight, cost-effective design could be developed that would exceed the performance characteristics of the existing port covers for this particular application. The port covers shown in Figure 1 were easily spun, using an automated spinning machine, from sheet aluminum at a lower total cost (~$6.00 each) and provide a better fit than the existing design.

Also, from an existing practice standpoint internal spray painting was, and still is, a common practice. However, use of spray-paint with organic volatiles is less accepted today. A survey of commercial radiological decontamination vendors identified a product that has been shown to be effective for applications of interest. The PBS™ was developed at the University of Cincinnati and has been used at other DOE sites for dispersion control of contaminated materials. Because of its demonstrated abilities, ease of application, and nontoxic, water-based characteristics, it was selected for use in the 308 Building to stabilize the remaining radiological materials within the enclosures and provide a barrier to migration. However, although most internal enclosure components are constructed of stainless steel, some of the commercial products (i.e., connectors, receptacles, etc.) are constructed of carbon steel. The water-based product used promoted rusting of these components. The subject components should be pretreated with an antirust inhibitor before coating with water-based sealants.

New techniques were also evaluated. In particular, shrink wrap coverings were considered early in the process. It was envisioned that after initial internal preparation with PBS, the entire enclosures would be sealed with shrink wrap. The idea was to cocoon the enclosures with an additional barrier to further confine and minimize surveillance requirements. However, after discussions with D&D personnel, it was concluded that routine surveillance would be performed for assurance purposes, and that the shrink wrapping would be unnecessary and possibly hinder the surveillances. This, however, is a viable concept and may have applications for short-term (such as handling and disposal of contaminated equipment during the D&D phase) or even long-term confinement applications. A similar product, heavy shrink tubing, was selected for use in the

308 Building. Heat-activated, adhesive-lined shrink tubing was used to hold the port covers to the port ring and confine the radiological materials at these vulnerable locations. These materials are considerably thicker and much more durable than the shrink tubing used in the product packaging industry.

IV. SUMMARY

A process was undertaken to utilize personnel with extensive experience for selection of designs, concepts, etc., which made use of existing commercial products, processes, and practices to provide an approach that meets functional requirements in a cost-effective manner. Implementation of the elements described will stabilize and confine the residual radiological material within the 308 Building enclosures and exhaust ducts and allow shutdown of the active support systems for up to 30 yrs.

DISTRIBUTION

Number of Copies

Offsite

3 Lawrence Livermore National Laboratory

Scott A. Couture
ANS Sixth Topical Meeting on Robotics and Remote Systems
Lawrence Livermore National Laboratory, L-591
7000 East Avenue
Bldg 482, Room 2025
Livermore, CA 94551

Onsite

6 U.S. Department of Energy
Richland Operations Office

O. A. Farabee (5)	N1-39
R. G. Hastings	N1-39

8 Westinghouse Hanford Company

M. W. Benecke	L6-32
G. W. Lanham	N1-40
I. L. Metcalf	N1-40
J. W. Rich	N1-40
K. E. Schwartz	N1-40
Document Clearance Administration	A3-36
Document Processing and Distribution	L8-15
Central Files	L8-04