Conf-930722--38

UCRL- JC-114803
PREPRINT

IMAGING XUV SPECTROSCOPY OF A Z-PINCH PLASMA IN THE FORMER SOVIET UNION

H. Carl Bruns
Paul T. Springer
James A. Emig
Nick E. Lanier
John A. Hernandez

This paper was prepared for the 1993 Annual International Symposium on Optical Instrumentation and Applied Science
San Diego, CA, July 14-16, 1993

August 11, 1993

Lawrence Livermore National Laboratory

This is a preprint of a paper intended for publication in a journal or proceedings. Since changes may be made before publication, this preprint is made available with the understanding that it will not be cited or reproduced without the permission of the author.

MASTER

DISTRIBUTION OF THIS DOCUMENT IS UNLIMITED

DISCLAIMER

This document was prepared as an account of work sponsored by an agency of the United States Government. Neither the United States Government nor the University of California nor any of their employees, makes any warranty, express or implied, or assumes any legal liability or responsibility for the accuracy, completeness, or usefulness of any information, apparatus, product, or process disclosed, or represents that its use would not infringe privately owned rights. Reference herein to any specific commercial products, process, or service by trade name, trademark, manufacturer, or otherwise, does not necessarily constitute or imply its endorsement, recommendation, or favoring by the United States Government or the University of California. The views and opinions of authors expressed herein do not necessarily state or reflect those of the United States Government or the University of California, and shall not be used for advertising or product endorsement purposes.

SPIE CODE NO. 2011-47

Imaging XUV spectroscopy of a z-pinch plasma in the former Soviet Union

H. Carl Bruns, Paul T. Springer, James A. Emig, Nick E. Lanier, John A. Hernandez

Lawrence Livermore National Laboratory
PO Box 808 Livermore, California 94550

ABSTRACT

In 1991 a group of scientists from the Angara 5 pulsed power facility at the Kurchatov Institute in Troitsk, Russia had determined the thermal emission from an implosion of xenon gas onto an annular, molybdenum doped foam liner to be 30 TW/cm^2. This represents an extremely efficient conversion of energy into a high fluence radiation field. In order to verify this claim and better understand the process of producing radiation by means of a Z-pinch plasma device, a series of experiments were proposed through a collaboration from Sandia National Laboratory-Albuquerque, Los Alamos National Laboratory, and Lawrence Livermore National Laboratory. Due to previous experience with x-ray spectroscopic measurements in the XUV region, the team from Lawrence Livermore Lab took on the task of designing, constructing, and fielding the necessary diagnostic equipment to spatially and temporally resolve plasma temperatures throughout the implosion of the high Z foam target.

1. INTRODUCTION

The diagnostic equipment developed by Lawrence Livermore National Laboratory (LLNL) for the Angara 5, Z-pinch plasma experiment was derived conceptually and physically for the most part from previous experience in x-ray spectroscopic research of plasmas. Having the necessary background in developing diagnostic equipment and actually having many of the components in hand proved to be of vital importance to the success of this experiment due to the short time allowed for the development of the apparatus (six months from conception to installation). The resulting diagnostics "package" that came forth could be divided into several subsystems requiring specific technologies, each complimenting the others as did the individuals responsible for their development. This report will discuss the subsystems of the spectrometers and their associated components, the detectors, and the fiber optics used to transmit data to the streak cameras. The streak cameras themselves will be mentioned only briefly as well as the experimental results as necessary to understand the experiment.

2. PURPOSE OF THE DOE/ANGARA V EXPERIMENT

In the pursuit of increased efficiency of ultra high electric power generators such as the Saturn facility operated by Sandia National Laboratory (SNL) in Albuquerque, NM, the Department of Energy (DOE) has sponsored a series of experiments on a similar device at the Trinity facility in Troitsk, Russia called Angara V. According to earlier predictions and diagnostic verification,[1] techniques which are employed at Angara V to create radiative plasmas appeared to have greater efficiency than those utilized at other facilities. Differing theoretical predictions also led to the desire to install diagnostic equipment such as that used at several facilities in the US (fig.1). Hence, the collaboration between Angara V staff and the three US. national labs was initiated in attempt to achieve a mutual agreement regarding the true energy output of Angara V using Molybdenum doped foam targets.

3. SPECTROMETERS

In the early stages of the spectrometer design, several parameters were given. Some of these were the physical features of the target to be observed, the geometry of the Angara chamber, the spectral region to be measured and the vacuum pressure in the Angara chamber. Other issues were assumed such as the probability that high velocity debris from the target could damage internal components and the fact that EMP levels around the target area were substantial.

Taking these factors into consideration, it was decided that the spectrometer would use a 2400 line varied line space Hitachi diffraction grating to disperse the spectrum onto a micro channel plate (mcp) x-ray detector (fig.2). The grating must be positioned at a 1.5° angle to the incident x-rays allowing 735 eV x-rays to leave at 5.4°. 70 eV x-rays exit the grating at 16.8°. In front of the grating it was deemed necessary to have a grazing incidence iridium mirror to eliminate high energy x-rays and provide extra protection by deflecting any debris that might get through. This mirror which consisted of a polished glass substrate and coated with 500Å iridium was set in the x-ray path at 2°.

The primary means of protection for these components from possible damage due to debris is a fast acting valve manufactured by Spectral Precision Co. It is placed between the target and the Ir mirror. This electrically triggered, gas actuated valve which is normally closed was set to open and close in 300 micro seconds at a gas pressure of 180 psig. Using this valve also solves the problem of separating the 10^{-4} Torr vacuum in the chamber from the 10^{-6} torr necessary for the mcp detector.

Between the mirror and target are entrance optics consisting of a pair of narrow slits. The first one located 30 cm from the target and oriented parallel to the grating is 1 cm long and could have widths of 1000, 500, 250, or 100 μm. The second slit which has the same size options is located 1 meter from the target and oriented perpendicular to the grating. It's purpose is to project an image of the target. These slits were laser cut out of 250 μm thick tantalum. Both slits can be easily changed or replaced but proved to be very durable and survived the blasts of many shots. In fact it was felt that these slits were instrumental in limiting debris from traveling through the spectrometer.

Once the geometry of the components was laid out using CAD drawings, the housing and fixturing was produced. This mainly consisted of stainless steel tubing with metal or o-ring sealed flanges. Each critical component was mounted by means of semi adjustable fixtures. Adjustment and registration stops were also provided at housing interfaces to allow for greater flexibility during the alignment procedure.

Optical alignment of the spectrometer was performed initially with an alignment telescope on an optics bench. Each component was installed in it's predicted position and adjusted to replicate the x-ray path through the device. This process required a certain amount of logic since the movement of one component affected the position of a corresponding component. Once a line of sight was established from the entrance aperture to the detector plane, a helium-neon laser beam was emplaced on this path. This allowed verification of the scope alignment as well as provide a fiducial mark to aid in referencing the detector position. This fiducial was the specular beam reflecting off of the grating. Knowing that specular light reflects at an angle of 1.5° and calculating the dispersion angles for each energy channel provides the means to position the detector. This position was verified during spectrometer calibration by examining the positions of characteristic x-ray lines, and absorption edges in the filters. Once the alignment was complete, each interchangeable item such as slits were removed, reinstalled, and checked to assure reproducibility.

Certain vacuum requirements are necessary for optimum performance due to the fact that the detector and spectrometer components share the same vacuum enclosure. Since the detector requires operation in an oil free environment with at least 10^{-6} torr vacuum pressure, provisions were made to evacuate the system with a turbo molecular vacuum pump backed by a diaphragm type roughing system. Vacuum gauging for low and high vacuum is also required to constantly monitor pressure.

4. INSITU LASER ALIGNMENT VERIFICATION

Before installation of the spectrometer at Angara V the issue of how to align the device to the target had to be resolved. Therefore a scheme to use a small laser to shine backward through the spectrometer was developed. This technique provided other benefits too. Fixturing was built to mount a small HeNe laser at a right angle to the line of sight near the detector outside of the vacuum system. The laser then shines through a vacuum window on to a 45° mirror that is positioned so the specular beam barely but completely intersects it. This small laser is then manipulated to reflect back along the specular beam path to the grating which then follows the x-ray path in the opposite direction, completely through the spectrometer. This system will provide a laser spot to be projected onto the target when the spectrometer is properly aligned. One of the other benefits is if the laser cannot be adjusted to shine all the way through, it indicates possible

misalignment of the spectrometer components. The other attribute is the use of the 45° mirror which deflects the specular beam to eliminate it's interference with the detector.

5. X-RAY DETECTOR

The x-ray detector used was a modified version of those previously used for x-ray imaging on nuclear tests. Two versions were used, an electrostatic focusing version (fig.3) and a non focusing version. Each basically consisted of a micro channel plate with a gold photo cathode and a fiber optic face plate coated with cadmium sulfide phosphor. X-rays dispersed off the grating impinge on the photo cathode, varying in energy perpendicular to the plane of the grating and spatially, parallel to the plane of the grating.

In the focusing version, x-rays pass through interchangeable bandpass filters accurately positioned in front of the mcp at locations specified to detect energies of interest. The front of the micro channel plate is coated with five each, 4 mm wide gold strips whose purpose is to serve as a photo cathode and bias conductor. Positions of these strips also correspond to specified energy locations. Each has a separate conductive strip attached to allow different voltages to be applied to each strip to vary the gain as necessary. Behind the mcp is the focusing plate. It consists of a series of five tapered slots which electrostatically focus electrons from the mcp to the to the phosphor. Typical operating voltages are -500 to -1000 volts on the photo cathode, and +15,000 volts on the phosphor. The back of the mcp and the focusing plate are at ground. Once the focused electrons strike the aluminum coated phosphor, green light (520 nm) is emitted through the fiber optic face plate where the 150 μm wide light band is coupled into a linear fiber optic array. Assembly of this detector requires precisely aligning each component to a reference on the mounting flange with the aid of an optical comparator. This procedure helped assure maximum efficiency in converting x-rays to light.

The non focusing version incorporates the same basic design although it is simpler in principle. The bandpass filters which were used in the focusing detector were typically not used on the non focusing detector. Instead, a copper repeller grid was installed that would displace ions that would create unwanted background signals. The mcp face was completely covered with a gold photo cathode rather than strips, and the focusing plate was exchanged with a simple ground plate to back the mcp. With this version, instead of projecting specific energy bands, the entire spectrum from the grating can be observed. Operating voltages are the same with the repeller grid operating at +600 volts. Also, with this detector there was no need to accurately align the components.

Once the detectors were assembled they were conditioned and tested on a dc x-ray source. The conditioning procedure simply involved evacuating the detector to a pressure around 5×10^{-7} torr and applying voltage to the phosphor and mcp slowly to prevent electrical breakdown. X-rays were then applied for several hours to "scrub" the mcp holes and to assure reliability of the detector. Finally, each of the six detectors built were calibrated with a time integrating linear array camera to identify their relative efficiency.

At Angara 5, the focusing detector was used to provide a cleaner spectrum and to avoid detector saturation. Sensitivity was also increased due to the electron focusing. Time response of both versions is 400 ps and spatial resolution is 400 μm. The time response of the system is limited by modal dispersion in the fiber array to about 1.5 ns.

6. FIBER OPTIC ARRAYS

In order to transmit the data from the detector to the streak camera recording system, a set of five linear fiber optic arrays were used for each detector (fig.4). The fiber used is 200 μm core Fiberguide quartz glass with a 250 μm jacket. Each of the individual arrays consisted of eighty data fibers. On the detector end, forty fibers in the center are close packed while 20 fibers on each side were spaced by one fiber. The overall length of the row of fibers is 3 cm. The opposite end of the array which is 10 meters long was configured with two rows of 40 fibers packed side by side. Each of the five arrays were mounted against the detector face plate and spaced with shims according to where the light came through the face plate. This procedure was performed with the detector activated by means of a dc x-ray source. As light from the phosphor is coupled into the array, the opposite end is observed by eye while the detector end is adjusted

with shims. This is done until maximum intensity and brightness is achieved. Once each of the five arrays has been optimized they are clamped together and can be removed and reinstalled without realignment.

7. SPECTROMETER CALIBRATIONS

Once the spectrometers were aligned and the detectors complete, the system was installed on a laser produced plasma source with an x-ray monochrometer to perform an absolute calibration. This monochrometer setup is shown in figure 5. A 1 J/pulse, 10 Hz, frequency double neodymium YAG laser is focused onto a high-Z target to produce x-rays. The x-rays from the laser produced plasma are diffracted using a varied line spaced grating, and the beam intensity is measured using an IRD AXUV100 silicon photo diode. A portion of this beam is sent into the spectrometer and the light output is recorded using a micro channel plate intensified Reticon camera. The light output versus x-ray intensity input is recorded as the monochrometer is scanned from 70 to 700 eV. The scan is accomplished by moving the laser-produced plasma source position.

8. EXPERIMENTS AT ANGARA 5

Once the many logistical hurdles of transporting the equipment had been crossed, preparation for the experiments at Angara V began. To verify the integrity of the spectrometer alignment, the optical and laser alignment equipment used for the initial set up was once again used. An optics table was furnished and procedures practiced at home were repeated. The fast valves were also tested and the timing of them pre-set. The small verification laser was re-installed and aligned also.

Two spectrometers were installed, one on top of the chamber looking down to the center of the foam target and one horizontally looking at the side of the target (fig.6). The utilities necessary to run each device were high voltage, high pressure nitrogen, dry nitrogen, turbo pump power and vacuum lines which were attached at this time. Before evacuating the spectrometers, alignment of each to the target center was done by physically moving them until the small laser pointed at the proper location. Fixturing to lock them in position proved very reliable as periodic checks showed little or no sign of movement. Finally, the fiber optic arrays were installed and routed through steel shielding to the streak cameras.

Within one week of receiving equipment at Angara V the instruments were set up and ready to acquire data. The first few shots were short circuit shots intended to aid in coordinating the timing between Angara 5 and the US diagnostic equipment. These tests proved valuable since it was found that the fast valve timing needed correcting.

The next series of shots were fired without the foam target and only the xenon gas jet applied. This allowed the acquisition of data to further observe if the timing was correct and if the entire diagnostic system was functioning properly. After several of these shots, everything appeared to be operating as expected so the foam targets could begin to be tested.

Figure 7 shows the time and space resolved axial emission profiles in the five spectral bands for one of the first foam shots. The data shows the foam heating, motion, and stagnation dynamics as viewed from the top with the vertical spectrometer. This particular shot is slightly asymmetric although shots with near perfect symmetry were also seen. The data also shows that radiation of the foam is inefficient at heating its interior. This is evident due to a bismuth disc which reflects the radiation temperature. When the xenon first strikes the foam, the 750 eV channel shows strong emission from xenon M-shell radiation, making the spectrum highly non Planckian. The spectrum near 750 eV is about 25 times more intense than the equivalent Planckian spectrum. At this time the foam emits approximately 3 TW/cm^2,while the emission from the foam interior is 5 times weaker.

9. CONCLUSION

After many months of planning and preparation, the U.S./Angara 5 experiment proved to be very successful. Within one week of arrival in Russia the delegation from the three U.S. Department of Energy Laboratories in cooperation with the Angara V staff began to obtain high quality data as intended.

The LLNL XUV spectrometers were very reliable and provided extremely valuable information about the radiation produced by Angara 5. From the LLNL data, conclusions can be reached regarding plasma temperatures that were previously unknown. The knowledge gained will be very valuable to the advancement of pulsed power technology in the U.S. and the Former Soviet Union. Beyond this, the benefits to relations between U.S. and Russian institutions are immense.

10. ACKNOWLEDGMENTS

The authors wish to thank the many people that assisted in making this a successful endeavor. In particular they wish to thank Gary Guethlein, and Joe Swenson of LLNL, and Forbes Powell of Luxel Inc. Of course great appreciation is extended to Dr. Valentine Smirnov, the Angara 5 staff, and our many Russian hosts and partners in this experiment.

Work performed under the auspices of the U.S. Department of Energy by the Lawrence Livermore National Laboratory under contract W-7405-Eng-48.

11.REFERENCES

1. V.P. Smirnov et.al., "Progress in investigations on a dense plasma compression on Angara -5-1", *Proceedings of the Eighth International Conference on High-Power Particle Beams*, Vol.1 pp.61-78, Novosibirsk,USSR, 2-5 July 1990.

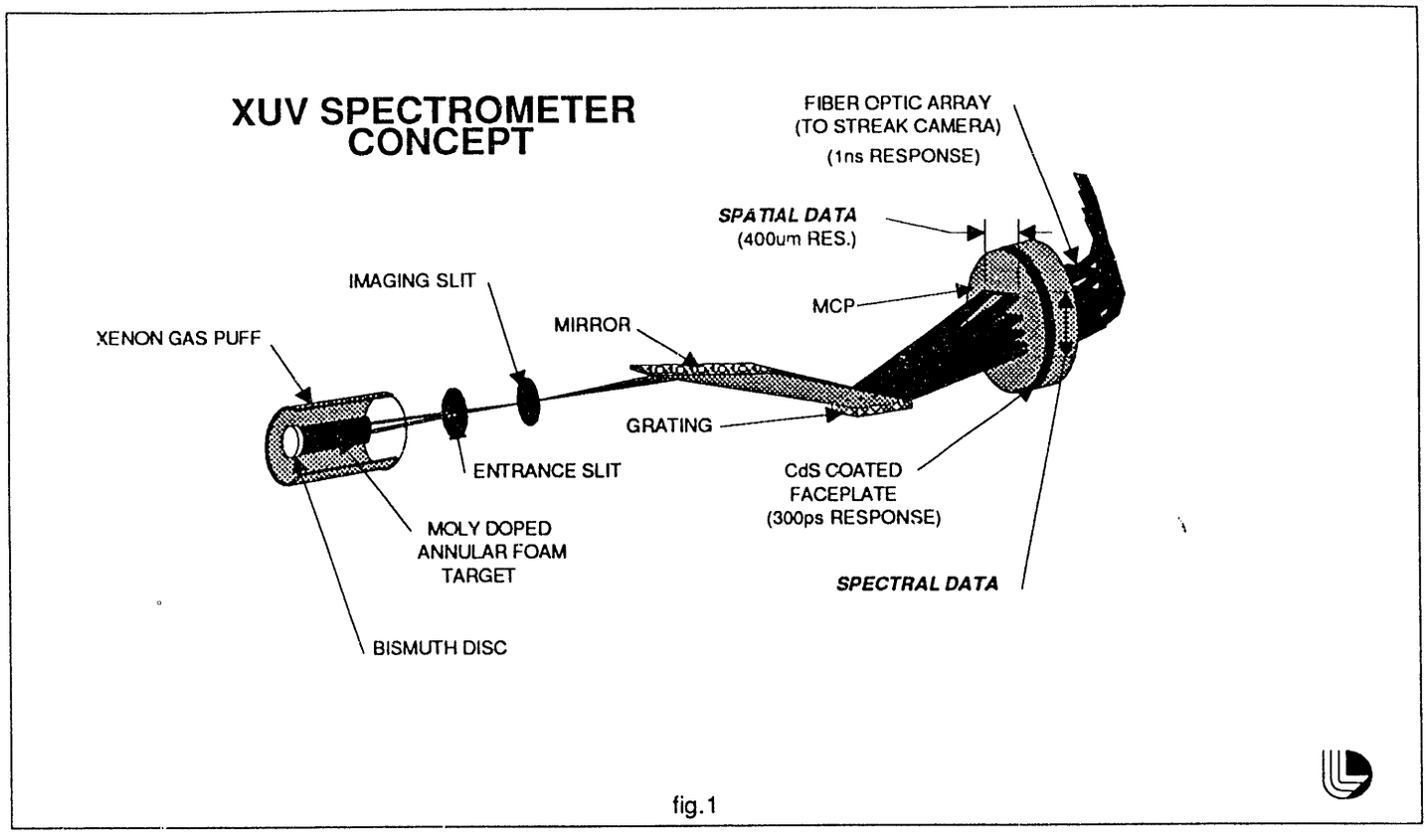
XUV SPECTROMETER CONCEPT
FIBER OPTIC ARRAY (TO STREAK CAMERA) (1ns RESPONSE)
SPATIAL DATA (400um RES.)
IMAGING SLIT
MCP
MIRROR
XENON GAS PUFF
GRATING
ENTRANCE SLIT
CdS COATED FACEPLATE (300ps RESPONSE)
MOLY DOPED ANNULAR FOAM TARGET
SPECTRAL DATA
BISMUTH DISC

fig. 1

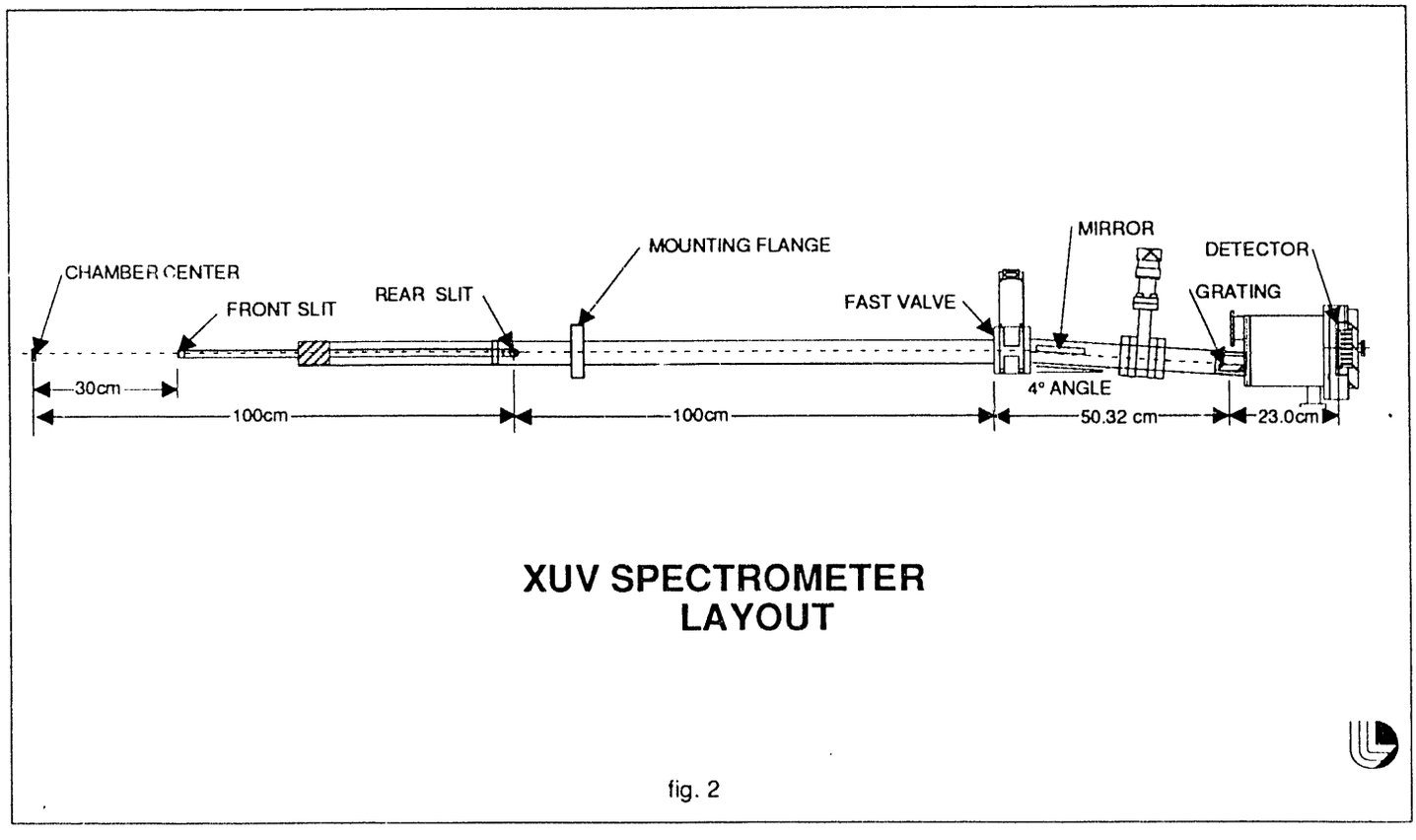
CHAMBER CENTER
FRONT SLIT
REAR SLIT
MOUNTING FLANGE
FAST VALVE
MIRROR
DETECTOR
GRATING
4° ANGLE
30cm
100cm
100cm
50.32 cm
23.0cm
XUV SPECTROMETER LAYOUT

fig. 2

• BAND PASS FILTERS			
MATL.	TK.(KÅ)	ENERGY(eV)	RANGE(±eV)
Al	2K	70	3.7
Y/LEX.	3.7/1.1	125	9.5
Ag/LEX.	.5/20	225	24
Ti/LEX.	4.6/1	400	56
Cu/LEX.	2.3/1.1	750	146

ELECTROSTATIC FOCUSING DETECTOR

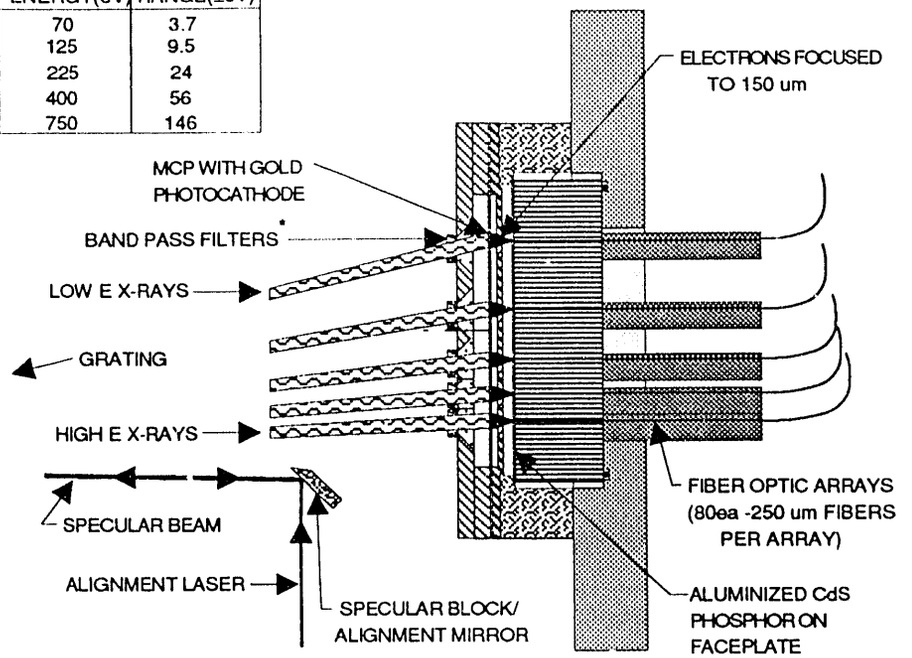

fig. 3

FIBER LAYOUT

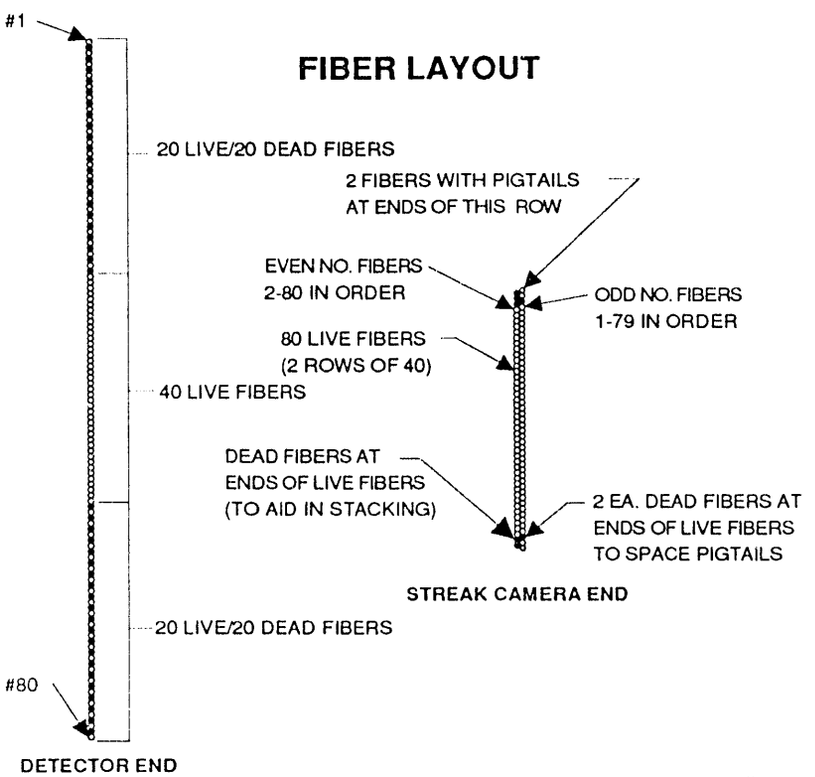

ARRAY LAYOUT

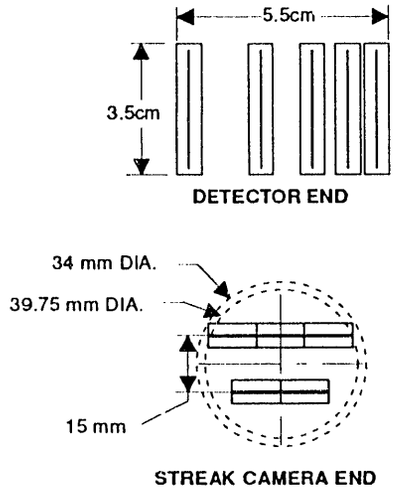

fig. 4

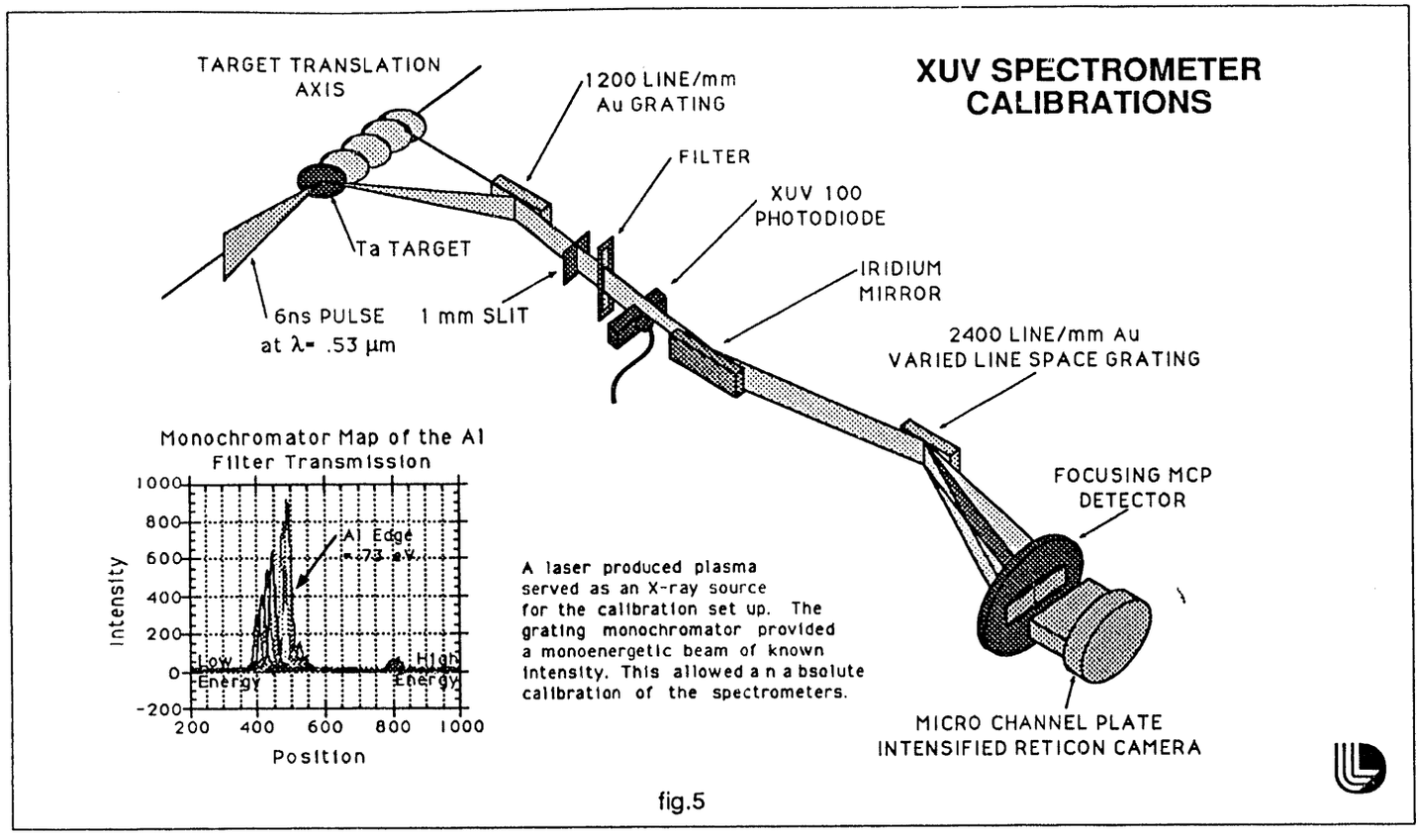
XUV SPECTROMETER CALIBRATIONS
TARGET TRANSLATION AXIS
1200 LINE/mm Au GRATING
FILTER
XUV 100 PHOTODIODE
IRIDIUM MIRROR
2400 LINE/mm Au VARIED LINE SPACE GRATING
FOCUSING MCP DETECTOR
MICRO CHANNEL PLATE INTENSIFIED RETICON CAMERA
Ta TARGET
6ns PULSE at λ= .53 μm
1 mm SLIT
Monochromator Map of the Al Filter Transmission
Intensity
Position
Al Edge ~73 e.v.
Low Energy
High Energy
A laser produced plasma served as an X-ray source for the calibration set up. The grating monochromator provided a monoenergetic beam of known intensity. This allowed a n absolute calibration of the spectrometers.

fig.5

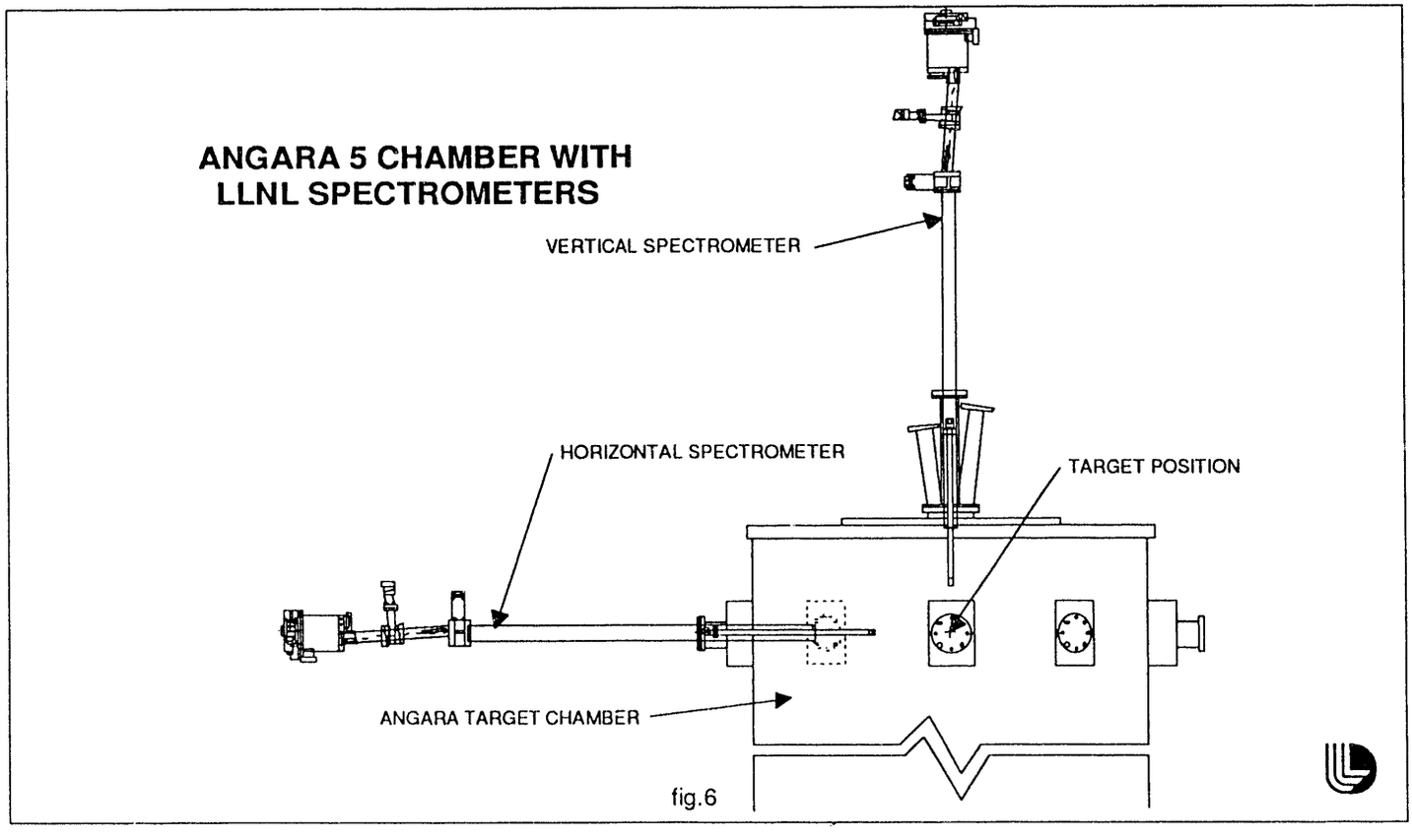
ANGARA 5 CHAMBER WITH LLNL SPECTROMETERS
VERTICAL SPECTROMETER
HORIZONTAL SPECTROMETER
TARGET POSITION
ANGARA TARGET CHAMBER

fig.6

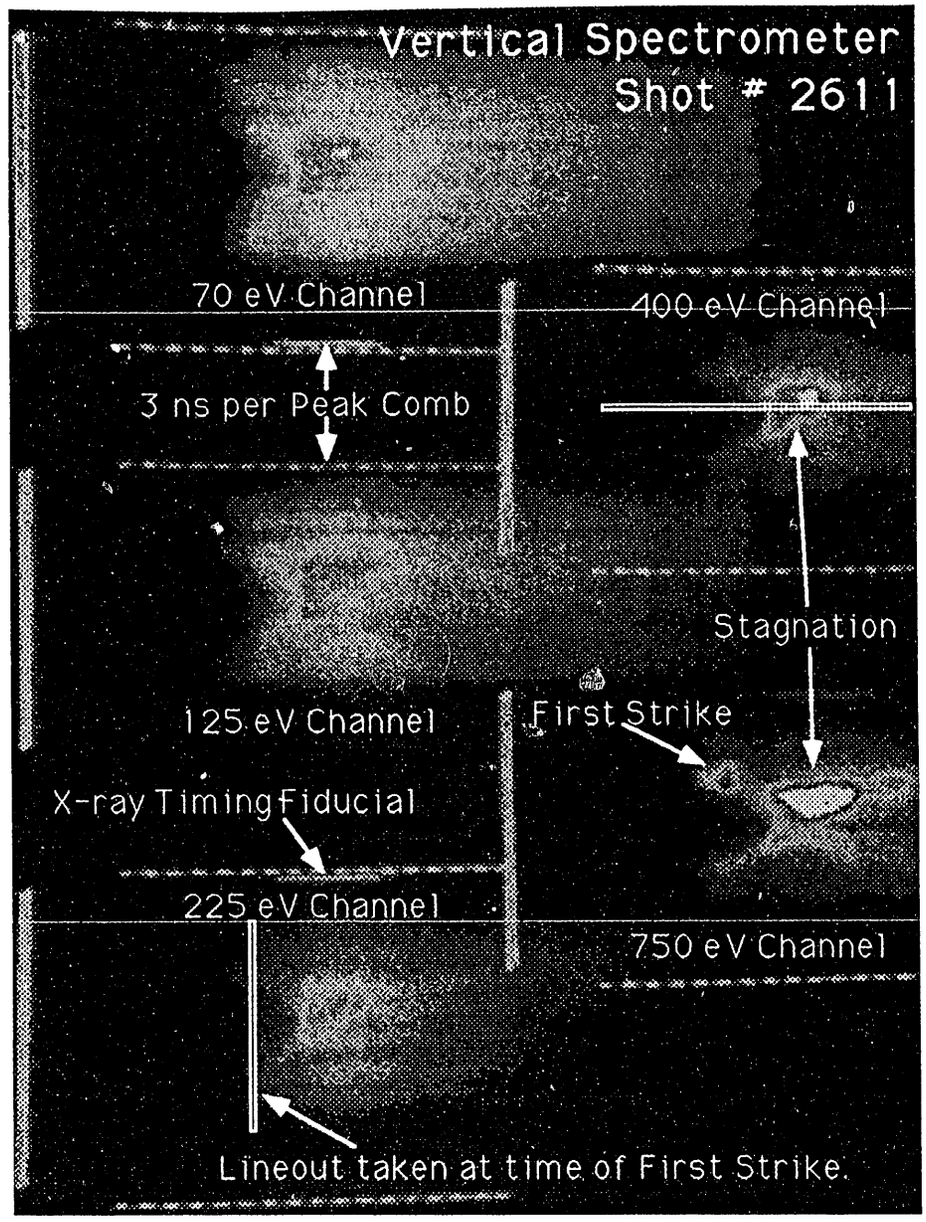
Vertical Spectrometer
Shot # 2611
70 eV Channel
400 eV Channel
3 ns per Peak Comb
Stagnation
125 eV Channel
First Strike
X-ray Timing Fiducial
225 eV Channel
750 eV Channel
Lineout taken at time of First Strike.

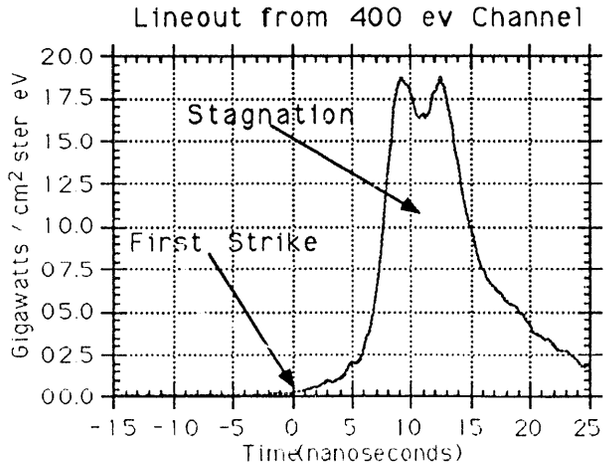
Lineout from 400 ev Channel
Gigawatts / cm2 ster eV
Stagnation
First Strike
Time(nanoseconds)

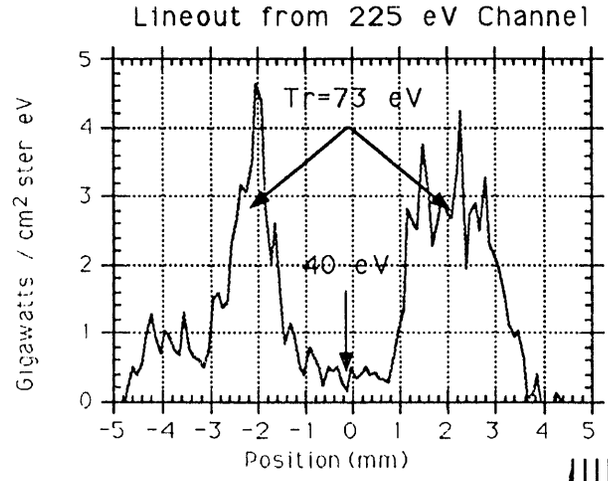
Lineout from 225 eV Channel
Gigawatts / cm2 ster eV
Tr=73 eV
40 eV
Position (mm)

fig.7

END

DATE FILMED

11/29/93