CONF-9309217--2

Overview of the U.S. Department of Energy Utility Battery Storage Systems Program

Russell Eaton
U.S Department of Energy

Abbas Akhil
Paul C. Butler
Sandia National Laboratories

Jonathan Hurwitch
Energetics, Inc.

DISCLAIMER

This report was prepared as an account of work sponsored by an agency of the United States Government. Neither the United States Government nor any agency thereof, nor any of their employees, makes any warranty, express or implied, or assumes any legal liability or responsibility for the accuracy, completeness, or usefulness of any information, apparatus, product, or process disclosed, or represents that its use would not infringe privately owned rights. Reference herein to any specific commercial product, process, or service by trade name, trademark, manufacturer, or otherwise does not necessarily constitute or imply its endorsement, recommendation, or favoring by the United States Government or any agency thereof. The views and opinions of authors expressed herein do not necessarily state or reflect those of the United States Government or any agency thereof.

Acknowledgement: This work was supported by the U.S. Department of Energy under Contract DE-AC04-76DP00789

MASTER

DISTRIBUTION OF THIS DOCUMENT IS UNLIMITED

ABSTRACT

Overview of the U.S. Department of Energy
Utility Battery Storage Systems Program

Russell Eaton, U.S. Department of Energy;
Abbas Akhil and Paul Butler, Sandia National Laboratories;
Jonathan Hurwitch, Energetics, Inc.

The U.S. Department of Energy (DOE) is sponsoring the Utility Battery Storage Systems Program at Sandia National Laboratories and its contractors. This program is specifically aimed at developing battery energy storage systems for electric utility applications commencing in the mid to late 1990s. One factory-integrated utility battery system and three battery technologies: sodium/sulfur, zinc/bromine, and lead-acid are being developed under this program. In the last few years the emphasis of this program has focused on battery system development. This emphasis has included greater interactions with utilities to define application requirements. Recent activities have identified specific applications of battery energy storage in certain utility systems and quantified the value of these applications to these utility companies. In part due to these activities, battery energy storage is no longer regarded by utilities as a load-leveling resource only, but as a multi-function, energy management resource.

Introduction

Electric utilities in the United States must maintain electric service reliability in the face of increased competition, growing interest in greater energy efficiency, and increased environmental restrictions. In addition to these challenges, utilities in several regions are finding it increasingly difficult to meet demand with existing generation capacity. U.S. electricity consumption is expected to rise from 2.7 trillion kilowatt-hours (kWh) in 1990 to 4.5 trillion kWh in 2010, a 1.7 percent annual increase. To meet the projected load growth, U.S. utilities will need new generation resources. Even if utilities can maintain their existing capacities by vigorous life-extension programs, approximately 200 gigawatts (GW) of new generation resources must be acquired to meet the demand for electric power.

The need for additional transmission and distribution (T&D) resources also is increasing due to increased electric demand and reliability requirements. Utility industry analysts project that the United States will require 170,000 miles of new high-voltage transmission lines by 2010. Concerns about environmental impacts and potential health effects of electromagnetic fields (EMF) are delaying or preventing construction of most new transmission lines. The uncertain availability of adequate transmission resources will further weaken the national electric network.

One technology that can play a flexible, multi-function role in the entire utility system is battery energy storage. A simple schematic of a battery system is shown in Figure 1. Batteries have been promoted for more than a decade for load-leveling and peak-power supply applications. However, utilities have not adopted battery storage because costs continue to outweigh benefits for single-purpose, traditional applications and the benefits of other applications with multi-function systems have not been recognized. Furthermore, there currently is a lack of

commercially available integrated battery systems for utility applications.

Recently, a new perspective has emerged recognizing that battery systems offer a range of mutually compatible benefits that will be an important link in the utility system of the future. Battery systems can be used to reduce the stress on individual transmission lines that are near their peak rating by reducing substation peak load. The same battery system also could provide area regulation, voltage stability, voltage regulation, and may increase the power quality and reliability to specific customers while providing demand-side management resources to utilities. In combination with renewable generation systems, batteries can enhance utility network stability and allow greater utilization of photovoltaics and wind resources. Battery systems, by virtue of their site flexibility and minimal environmental impact, also can address several environmental concerns affecting utilities today, including air emission standards and EMF effects. It is difficult to accurately estimate the benefits of battery systems on the national level; preliminary estimates indicate that a market penetration of 11 GW by 2010 could result in an overall benefit to cost ratio of 1.9 for the nation's utilities.

The Department of Energy (DOE), has recognized the potential for battery storage and is assisting industry to develop the technology as a competitive resource option for electric utilities and their customers to use beginning in the mid to late 1990s. The DOE Utility Battery Storage Systems (UBS) Program is being conducted by Sandia National Laboratories (SNL) and relies on close coordination and partnership with electric utilities, battery and electric equipment manufacturers, and systems suppliers to achieve its mission. UBS is responsible for the engineering development of battery systems for utility energy storage (UES) and other stationary applications. Development is accomplished through cost-shared contracts with industrial partners. In addition to program management and technical

direction of the contracts, SNL conducts analyses of the benefits of battery storage in utility systems and performs appropriate applied research activities. The performance and life of prototype batteries or components produced by development contractors are also characterized. A complete review of the UBS Program is contained in Reference 1.

The UBS Program is organized into five elements:

- Battery Systems Analysis*
- Subsystems Engineering
  - Lead-Acid
    - . Technology Development at Industrial Battery Comp. (GNB)*
    - . Evaluation and Applied Research at SNL
  - Zinc/Bromine
    - . Technology Development at Johnson Controls Battery Group, Inc. (JCBGI)*
    - . Evaluation and Applied Research at SNL
  - Sodium/Sulfur
    - . Technology Development at Silent Power, Inc. (SPI)*
    - . Evaluation at SNL
  - Electrical Subsystems
- System Integration
  - AC Battery Development at Omnion Power Engineering Corp.*
- System Field Evaluation
  - Thermal tests of Puerto Rico Power Authority (PREPA) Battery*
- Industry Outreach

* Subject of another paper at this conference

Battery Systems Analyses

In the Battery Systems Analysis program element, the UBS Program continues to study battery benefits and quantify the value of these benefits to utilities. Already, 20 applications of battery storage for utilities have been identified. Assessments of battery storage thus far have primarily involved specific utilities, and the results have been correspondingly dedicated to the individual utility. The program is now ready to characterize

benefit values that apply to utilities nationwide. Some of these benefits will need to be verified by utilities in future tests.

Four systems studies were started in late FY91 to identify and quantify possible benefits of battery energy storage in specific utility applications. The geographic distribution of these studies is shown in Figure 2. Utility partners were selected based on considerations of ownership and operating conditions to include a broad diversity of candidate utilities. The four utilities selected were San Diego Gas & Electric (SDG&E), Oglethorpe Power Corporation (OPC), Chugach Electric Association (CEA), and Bonneville Power Authority (BPA).

SDG&E represented a large, investor-owned utility. OPC represented an electric member cooperative, serving a substantial rural area. CEA also represented a cooperative structure, but a smaller service area inter-connected to a relatively small power pool in Alaska. BPA represented a large, non-investor-owned, public power marketing utility. BPA's study area was restricted to battery applications only in the Puget Sound area. All four utilities had an interest in or a strong potential for battery energy storage applications, and all except BPA shared the costs of the studies with direct and in-kind contributions. The analysis methodology was generally the same for each utility, but the study details were different due to specific internal planning and operating procedures and financial structures.

Applications were identified for each utility, with benefit-to-cost ratios ranging from less than one to greater than two. Unit decommitment and spinning reserve were the two most cost-effective applications on the generation side, even for utilities with relatively flat marginal costs. In the transmission and distribution cases, battery energy storage could potentially defer new distribution lines and transformer upgrades. Benefits for this application were greater if the line traversed difficult terrain or went through expensive urban areas. Generation

capacity credits were not significant unless the battery was sized for discharges of 6 hr or more, which increased the installed cost of the battery beyond the break-even point. This supported prevailing assumptions that smaller-sized batteries were the most cost-effective. In the cases where sensitivity studies were performed, service life and salvage value had minor effects on the benefit-to cost ratios.

These studies were screening-level studies and did not include detailed simulations of the impact of battery storage over the entire study period. Instead, the studies relied on a snap-shot approach of examining the effect of incorporating a battery during a few representative days from three or four selected years. Further, the mutual exclusivity of the benefits was not considered. These details were recommended to be added to the next phase, which would be a feasibility study for battery energy storage. Two of the four utilities have indicated an interest in performing feasibility studies that will include these needed refinements to more accurately quantify the economic value of battery energy storage benefits. These feasibility studies would also include the conceptual design and cost estimate of the complete battery energy storage system for specific sites selected by the utility.

Subsystems Engineering

Subsystems Engineering improves the subsystems that make up battery energy storage systems. The battery subsystem needs improvements to lower costs, increase performance, and improve integration with other system components. Consequently, the UBS Program is developing an improved battery technology, the maintenance-free valve-regulated lead-acid (VRLA) battery. When the existing cost-shared contract is completed, the technology will be ready for integration into utility systems. The use of improved near-term battery technologies, such as VRLA, offers the

potential to increase the quantity and diversity of utility applications that can be served by battery storage compared with conventional lead-acid batteries. Under the UBS Program, the advanced battery technologies zinc/bromine and sodium/sulfur are also being progressed specifically for these applications under cost-shared contracts. The primary advantage of each is the possibility for lower life-cycle costs. These reduced costs would result from projected lower capital costs, less required maintenance, longer service life, and, for sodium/sulfur, higher energy efficiency. Other benefits of the advanced technologies include the capability to accommodate multiple applications with a single battery plant or battery design (operational flexibility) and to satisfy applications with footprint or volume limitations.

Although a number of candidate advanced battery technologies are being developed with private and public funding, zinc/bromine and sodium/sulfur are thought to have the best chance to provide the desired benefits and be commercially available around the year 2000. The technologies have different sets of obstacles to overcome because two radically different types of batteries are represented. However, during the course of this program, development of any emerging battery technology (e.g., lithium/polymer electrolyte, nickel/metal-hydride) will be closely monitored to determine whether a utility-specific activity is warranted.

In this program, development is focusing solely on the needs for UES applications, which may be different than those for other applications such as electric vehicles. While both utility and vehicle applications mandate a high level of safety, battery systems for UES applications must have characteristics which emphasize cost over weight or volume-based performance requirements. Weight and volume may still be important in cases where systems will be transported or where system footprint is critical.

For the electrical subsystem, UBS will develop standardized, modular PCS designs that will lead to lower manufacturing costs. The focus of this subelement is to improve the electrical subsystems, such as power conversion, control systems, and switch gear, by pursuing design standardization leading to lower manufacturing cost and incorporating advances in power electronics to improve performance. Activities in this area are just beginning.

Valve Regulated Lead-Acid Technology Development - GNB

The initial efforts in this contract have focused on implementing manufacturing process techniques that can significantly improve valve-regulated lead-acid (VRLA) battery system consistency and reliability. These have included an improved electrolyte-filling technique, an improved jar-to-cover heat-sealing process, and an improved leak detection method, all of which are meant to reduce the possibility for electrolyte leakage from the cell and the potential for development of electrical ground faults that can impact both battery performance and personnel safety. An automated post welding process has been implemented to speed this manufacturing step and also greatly improve weld penetration and uniformity. Work has also begun on a full characterization and demonstration of the pressure relief valve system, a critical element of any VRLA battery design to ensure performance and design life of the battery.

Figure 3 shows the expected evolution of the GNB VRLA products as battery development continues. An intermediate product incorporating the manufacturing improvements described above and also incorporating design modifications to increase the energy density and specific energy of the current ABSOLYTE VRLA cells has been introduced. Discharge testing has confirmed a 12 to 17% improvement in capacity at the discharge rates typically used for utility battery energy storage systems. Initial experimental

builds of an advanced lead-acid battery design with exceptional high-rate discharge capabilities have not met design expectations, however, and modifications to this cell's grid and active materials are planned to bring performance up to expected levels.

The battery improvement tasks are supplemented by other tasks that require the conceptual design of battery systems for specific utility applications and the economic analysis of existing designs compared to improved and advanced battery designs. These tasks require the involvement of "host" utilities to provide the requirements and the application parameters for the economic analysis. These tasks are being performed by Pacific Gas & Electric (PG&E) and Puerto Rico Electric Power Authority (PREPA), the two utilities on the GNB team. Each utility has identified specific battery energy storage applications in its network and is using these applications as representative cases for the GNB contract. The host utility input and the related conceptual design and economic study efforts are being facilitated by the University of Missouri at Rolla (UMR).

Zinc/Bromine Technology Development - JCBGI

JCBGI is in the second year of a cost-shared contract to fabricate, evaluate, and optimize a zinc/bromine battery system suitable for electric utility applications. A schematic of a zinc/bromine battery is shown in Figure 4. In early FY92, Phase 1, which demonstrated the feasibility of the existing zinc/bromine technology, was completed. This included building and testing several 1-kWh batteries that demonstrated energy efficiencies of >75% with <10% capacity loss in 100 cycles. Many of these batteries cycled between 250 and 350 cycles before failure. Safety and cost analysis studies were initiated. These data and studies showed that zinc/bromine batteries could be built at low cost, have potentially long lifetimes, can be recycled, and still offer 2-3 times the specific energy of lead-acid batteries.

Once zinc/bromine battery feasibility was demonstrated in Phase 1, the majority of effort in Phase 2 has been to optimize the components of the battery system and to design a new battery stack that is large enough to form building blocks for a modular system that could be used for a variety of utility applications. Work has been done to improve the performance and manufacturability of the carbon plastic electrodes, the active carbon layer, separator materials, and terminal electrode materials. The design of a new cell stack has been essentially completed. Modeling techniques including computer-aided engineering design and a JCBGI-proprietary performance model have been used extensively in this design process. Finite element analysis has also been used to predict the end block stress and model flow of the electrolyte in the cell. There is confidence in this new design since these models have been validated using the existing design.

Zinc/Bromine Technology Evaluation - SNL

An 8-cell, 1-kWh zinc/bromine battery from the utility battery development contract with JCBGI was tested at SNL during FY92. Improved welding techniques were incorporated in this battery to prevent leaks. A total of 273 charge/discharge cycles (26 cycles at JCBGI and 247 cycles at SNL) was completed on the battery before performance declined below the failure criteria. The battery performed well and experienced absolutely no leaks in the stack or in any of the auxiliary components.

A 15-kWh battery, consisting of two 50-cell stacks assembled in a parallel configuration, was fabricated by JCBGI as the next deliverable for this contract. Twenty charge/discharge cycles were performed at JCBGI. A total of 180 cycles was performed at SNL with only a slight downward trend in efficiency. During cycle 201, a lightning storm caused a temporary power outage that

ultimately led to the failure of the battery. The projected life of this battery was approximately 300 cycles.

Zinc/Bromine Applied Research - SNL

A durability study of zinc/bromine electrode materials was completed at SNL. The six-month study examined the effects of electrolyte on glass-filled carbon plastic electrodes made of high density polyethylene (HDPE), and accelerated aging was carried out at temperatures up to 60°C. Results from this study show that electrode materials with higher polymer content sorb greater amounts of electrolyte. Higher glass content may increase dimensional stability (length and width). The electrode materials did not show evidence of chemical attack by the electrolyte, nor was the crystallinity of the polymer affected. The mechanical properties of the electrode materials decreased slightly due to sorption of electrolyte, and the electrical conductivity increased upon exposure to the electrolyte.

Sodium/Sulfur Technology Development - SPI

During FY92, the majority of the activity at SPI focused on the following: 1) identification of UES applications and markets that are attractive for the sodium/sulfur technology, 2) design of a UES cell and battery, 3) development of the central sulfur (c/S) UES cell and selected battery components, and 4) fabrication and initial qualification of the UES cell. A schematic of a sodium/sulfur battery is shown in Figure 5.

Relative to the battery system, a preliminary design of a battery module was completed. This module has an energy capacity of 75-kWh at 125 VDC and constitutes the building block of an integrated battery storage system. These modules have been given the designation NAS-Pac, for sodium/sulfur-ac power. Similar to an EV

battery, each module is autonomous and represents the smallest replaceable energy unit within the battery system. Local control over the thermal environment and the critical electrical control functions is provided. Eight of these NAS-Pac modules are used with a power-conversion system to form an integrated battery system. The modules are arranged in a 4-series by 2-parallel configuration to provide 500 VDC and fit within a 7.5-ft-high by 7-ft.-wide by 14-ft.-long envelope set by the preferred power conversion system and the need to transport the system via standard truck or seabox. These portable power units fit into the concept of distributed generation. In this respect, the use of advanced batteries (e.g., sodium/sulfur) is a definite benefit, requiring only 20% of the volume of an equivalent lead-acid battery system. These same benefits accrue to the user in that the same energy storage can be accomplished in 1/5 the footprint. System level specifications are 300 kW, three-phase 480 VAC. The battery is rated for a 2-hr operation (i.e. 600 kWh).

Based on a preliminary assessment of the c/S UES cell reliability, the module cycle life is expected to be 1500 cycles, or five years, depending on utilization. The module design is such that it can continue to operate with up to 38% of the cell strings failed. As part of a no-maintenance battery philosophy, interstitial latent heat storage within the module and a standard, non-evacuated thermal enclosure are employed as passive methods to limit cell temperature rise. These features decrease the cost of the battery but also cause higher heat loss (12 W/kWh) compared with an EV-type evacuated enclosure. The actual impact on system efficiency, however, will depend on the application. For example, to satisfy the twin-peak diurnal cycles of electrified rail transit applications, the make-up heat is to 6 to 8% of the stored electrical energy. This loss could be halved by using the more expensive evacuated insulation system.

Sodium/Sulfur Technology Evaluation - SNL

An 8-V, 40-cell XPB sodium/sulfur module was life-cycle tested at SNL during FY92. A total of 168 charge/discharge cycles was completed on the module. Cells from four strings failed or were close to failure when the module was removed from test. The capacity of the module at 100% DOD had declined from an initial 305 Ah to 190 Ah, a loss of 38%. The relatively rapid decrease in capacity of this module was not consistent with the behavior observed in earlier 40-cell modules tested at SPL. However, this behavior was indicative of the inconsistent performance of the entire XPB cell population tested at SPL. A second 40-cell XPB module is presently being tested using a utility energy storage (UES) test profile developed at SNL.

System Integration

In the System Integration element, the program develops complete units that include energy storage devices, electrical power conditioning equipment, and other required ancillaries. A modular system design approach is being promoted in all UBS system engineering and system integration activities. This approach is viewed as the most effective way to reduce production costs as well as one-of-a-kind engineering and design costs associated with most of the present systems.

AC Battery Development - Omnion

The AC Battery is a patented, modular battery system design concept that splits the battery into small groups, with each group containing its own power conversion electronics, factory-packaged as "modules." Several modules are packed in a truckable "container," and their power is aggregated to obtain the rated output of the container. A specification sheet is shown in Figure

6. One of the key advantages that the AC Battery concept offers is that it shifts the large on-site labor component to the factory floor, where tight quality controls can be maintained and cost savings realized by the repetitious manufacture of similar components.

Since initiation of the development of the AC Battery in December 1991, the implementation of this integrated system has evolved substantially. As development proceeded from the initial concept toward realization in hardware, the product took a refined form, incorporating new techniques for power conversion, heat transfer, and packaging. The highlights of the progress made on the AC Battery project follow:

- Resizing of the container for easier transportation, installation, and thermal management.
- Reconfiguration of the modules for higher dc voltage, higher energy density, and reduced power conversion subsystem (PCS) costs.
- Skewing of the module outputs for lower distortion and higher power conversion efficiency.
- A new transformer design that replaces the reactors in the PCS while delivering a 480-VAC output.
- Battery thermal test results that led to a dual-circuit heating, ventilating, and air conditioning (HVAC) system tailored to the differing needs of the PCS power train and the batteries.
- Software control of the PCS using FPGAs (Field Programmable Gate Arrays) to replace numerous discrete logic devices.
- Centralized high-level control providing greater system flexibility while minimizing the cost and complexity of the PCS.

System Field Evaluation

In the System Field Evaluation element, field qualification of hardware that incorporates the prototype designs and associated manufacturing methods are completed. This activity represents the final step of this phase of engineering development. For the technology being developed under UBS, the qualification process involves the detailed characterization of performance, maintenance requirements, and reliability of integrated systems at relevant utility sites. Most activities in this element are in the planning stages.

One activity in progress is thermal and electrical testing of a small scale version of the PREPA lead-acid battery. The 20 MW PREPA facility, which is under construction, will contain 6000 C&D cells configured in five parallel strings. Each cell has a nominal 2000 Ah capacity. The battery will be used to provide frequency regulation and spinning reserve for the PREPA system. The principal objective of the 24 V system tests to be carried out at SNL is to assess the thermal load that will be imposed on the battery facility during normal operation. If the data indicate that the cooling system has been undersized, adjustments can be made before operation of the facility begins. This work will be described in another paper at this meeting.

Industry Outreach

The UBS Program uses a variety of mechanisms to disseminate the latest battery information to utilities through its Industry Outreach program element. The program cooperates with the Utility Battery Group (UBG) in its efforts to educate, assist, and encourage utilities in examining the potential of battery systems. The UBG is a utility interest group composed of representatives from several utilities; manufacturers of batteries, converters, and systems; and consultants. The Program also coordinates with

the Electric Power Research Institute's (EPRI) efforts to inform its utility members about battery systems, to develop battery storage evaluation software, and to quantify the benefits of battery storage. The UBS Program actively works with these organizations and other utilities as battery energy storage continues to develop as a significant resource option for utility applications.

Conclusion

DOE, through their project team at Sandia National Laboratories, has implemented the UBS Program to develop utility battery storage systems in partnership with industry. UBS is communicating the benefits of battery storage to electric utilities because of the potential positive impact on national energy efficiency issues. DOE recognizes that action taken now can establish commercial utility battery storage systems in this decade. This, in turn will deliver significant national benefits including greater utilization of existing capital assets by utilities, greater incorporation of renewable energy into the generation mix, and a more robust and reliable electric network despite increasing complexity.

Reference

1. Butler, P. C., "Utility Battery Storage Systems Program Report for FY92", SAND92-2272, January 1993.

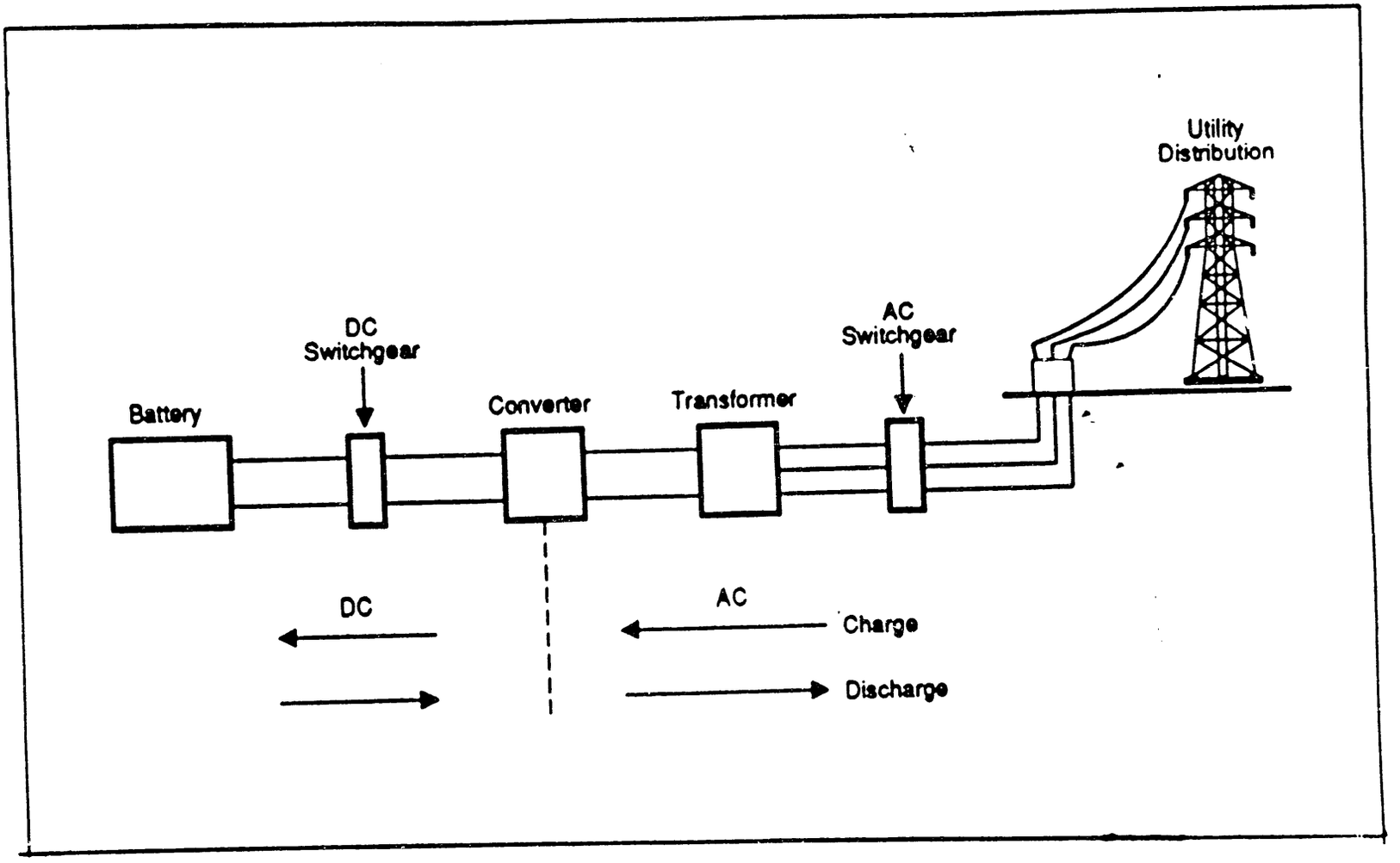

Figure 1. Components of a Utility Battery System

Figure 2. Geographic Distribution of Utility System Studies

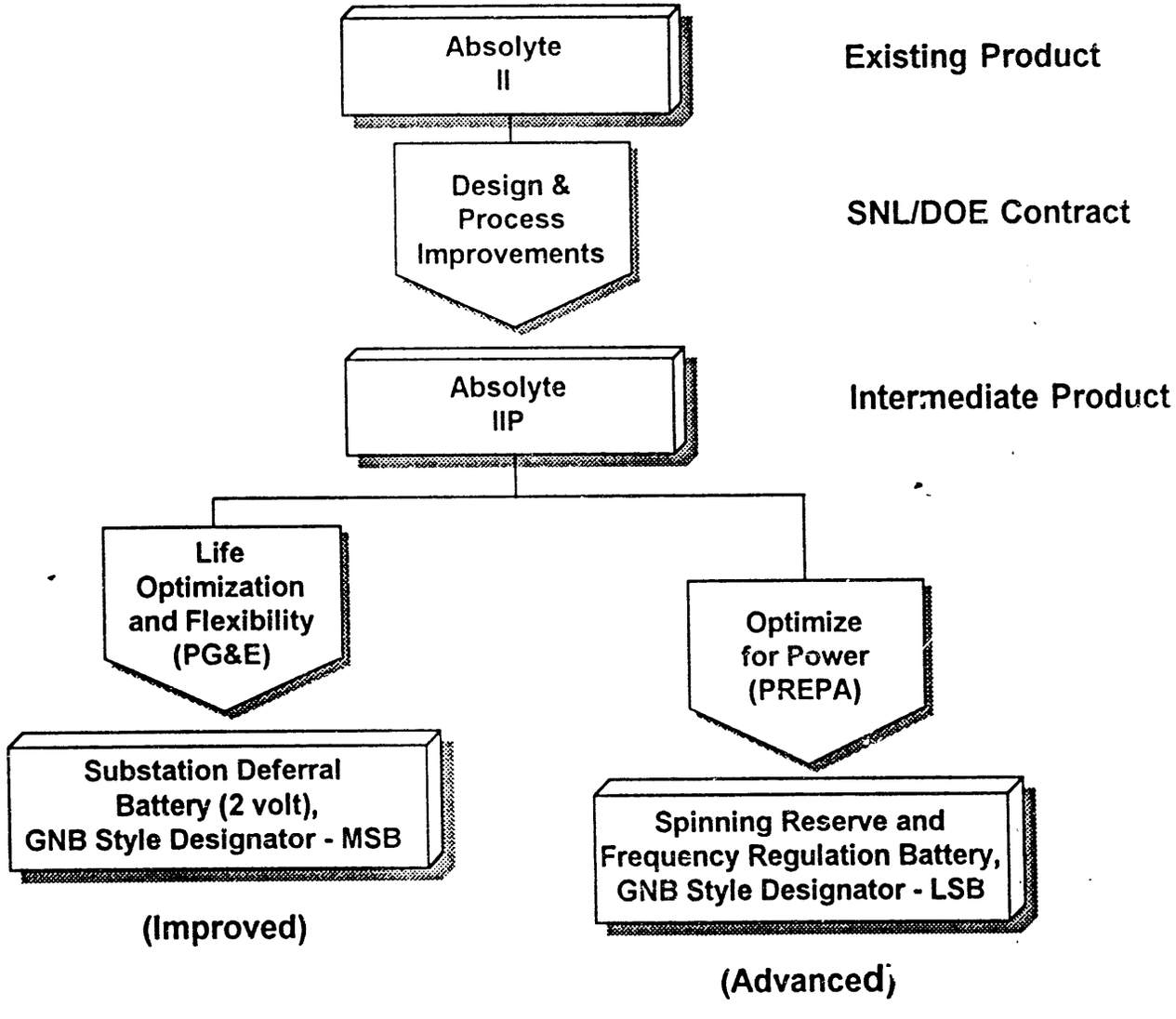

Figure 3. GNB Valve Regulated Lead-Acid Battery Development Evolution

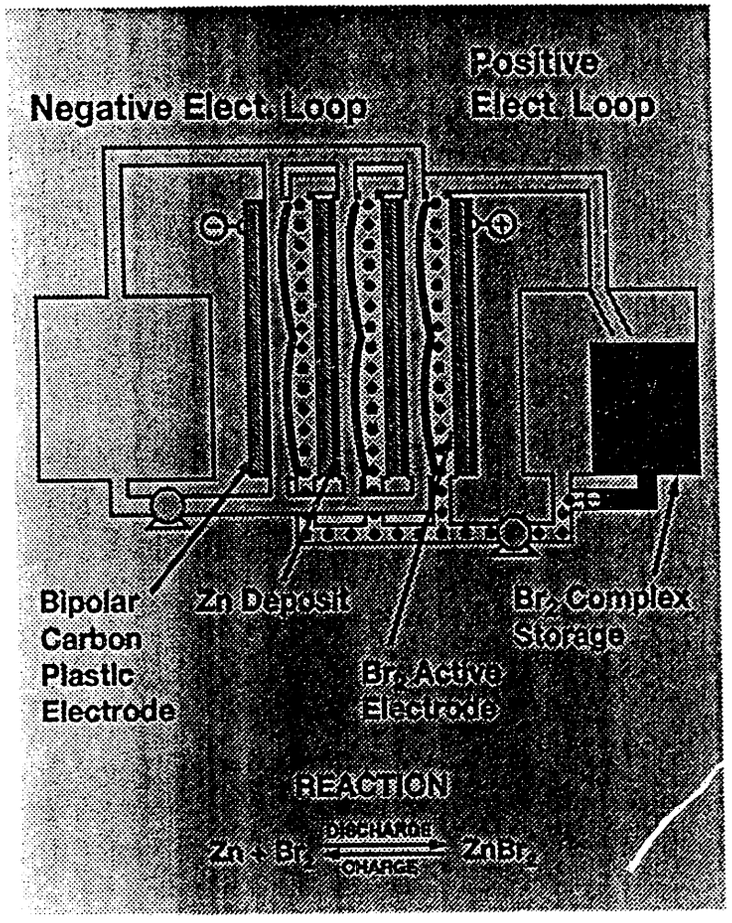

CHARACTERISTICS

- Flowing Electrolyte System
- Bipolar Construction
- Moderate Specific Power and Energy
- Low Cost Materials

DEVELOPMENT STATUS

- In Advanced Development
- Prototype EV Battery Tested
- Prototype Utility Battery Module Built

Figure 4. Rechargeable Zinc/Bromine Battery Schematic

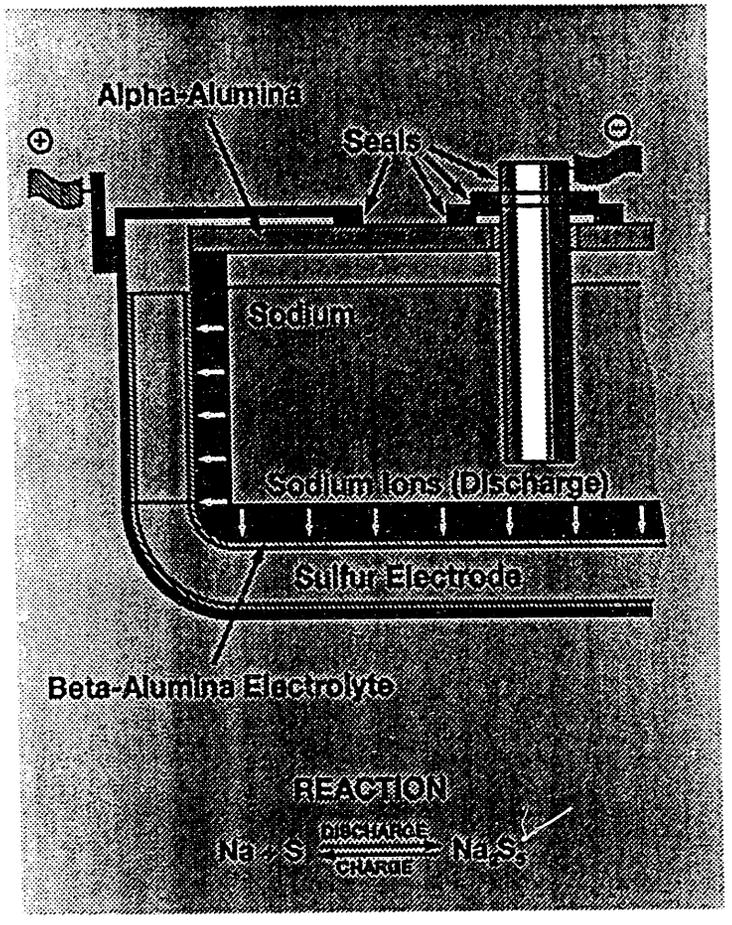

CHARACTERISTICS

- High Temperature System (310 to 350°C)
- Solid Electrolyte and Liquid Electrodes
- Good Specific Energy and Power
- Inexpensive Construction Materials
- High Charge/Discharge Efficiency
- Minimal Maintenance
- Cell Voltage: 2.076 V

DEVELOPMENT STATUS

- Cell and Battery Designs Qualified
- Pilot Production Facilities Operational
- Batteries Being Tested in EVs

Figure 5. Rechargeable Sodium/Sulfur Battery Schematic

Specifications

- Output/Input - 480 VAC 3 Phase
- Frequency - 50/60 Hz
- Capacity - 250 kW
- Current THD - Less Than 5%
- Power Factor - Unity/Controllable

- Enclosure - Outdoor/Steel
- Dimensions - 15' L x 7.5' W x 11' H
- Weight - 36,000 lbs
- Ambient Temperature - 0° to +110°F
- Humidity - 0 to 100%

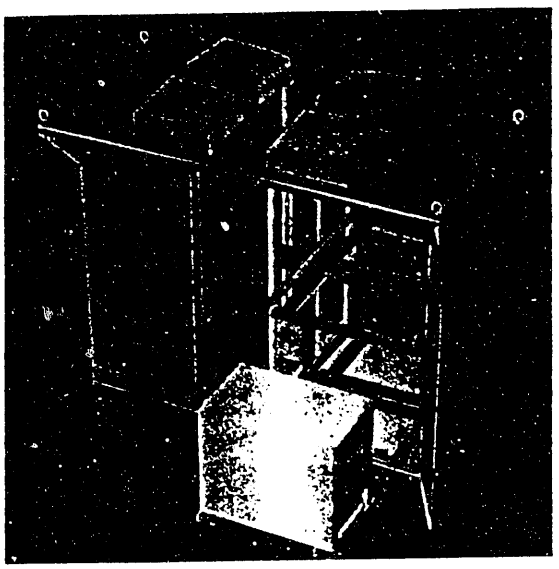

Features

- Easy to Install, Truckable, Pad-Mounted Outdoor Enclosure
- Advanced Power Conversion Technology Employing Insulated Gate Bipolar Transistors with Micro-Processor Controls
- 250 kW Peak Output Rating
  - 240 kWhr Storage (8-hour rate)
  - 167 kWhr Storage (1-hour rate)
- Maintenance-Free Battery Technology
- Factory Assembled & Tested to Minimize Installation and Start-up Time at Users Site
- Remotely Dispatched or Self-Controlled Based on Local Inputs
- Multiple Containers can be Paralleled to Build System Capacities up to 10 MW
- Factory Authorized Service Contracts for Maintenance and Field Support

Applications

- Spinning Reserve
- Peaking Capacity
- Voltage Regulation
- Frequency Regulation

Figure 6. AC Battery Container Specifications and Features

END

DATE FILMED

12/6/93