2

Conf-9404102--5
SAND 94-1147C

SLIMHOLE DRILLING FOR GEOTHERMAL EXPLORATION

John T. Finger
Geothermal Research Department
Sandia National Laboratories
(505) 844-8089

ABSTRACT

Sandia National Laboratories manages the US Department of Energy program for slimhole drilling. The principal objective of this program is to expand proven geothermal reserves through increased exploration, made possible by lower-cost slimhole drilling. For this to be a valid exploration method, however, it is necessary to demonstrate that slimholes yield enough data to evaluate a geothermal reservoir, and that is the focus of Sandia's current research.

BACKGROUND

Although the vast majority of drilling technology used in the geothermal industry is derived from the oil and gas industry, geothermal requirements are qualitatively different. There are hard, abrasive, and fractured rocks; high temperatures; and underpressured formations, frequently containing corrosive fluids -- all these factors create a more rigorous environment than normally found in oil and gas drilling. The service and drilling tool industries have little incentive to address these problems, since the number of geothermal wells drilled in a year is about 0.1% of the corresponding number for oil and gas. This lack of commercial R&D is the primary rationale for DOE's support of technology development.

Drilling costs associated with exploration and reservoir assessment are a major factor affecting future geothermal development. The geothermal industry (utilities and operators) needs to reduce these costs to be competitive in meeting the expanding requirements in the western United States for environmentally benign, alternative energy sources. Slimhole drilling has been shown to reduce oil and gas exploration costs by 25 to 75%, but the more hostile conditions for geothermal resources present technology challenges which must be solved before the cost impact there can be thoroughly evaluated.[1] Once demonstrated, slimhole drilling technology will have application to geothermal exploration and reservoir assessment in both the U. S. and international markets.

RECENT ACTIVITIES

Sandia first established the basic feasibility of slimhole exploration with in-house analysis, field experiments on existing geothermal coreholes, and collection of an extensive data set from comparable drilling in Japan (collection and analysis of the Japanese data is an ongoing activity.) We then negotiated an agreement with Far West Capital, which operates the Steamboat Hills geothermal field, to drill and test an exploratory slimhole on their lease. Steamboat Hills geothermal area is located about eight miles south of Reno, Nevada, and currently supports two power plants with a rated total output of approximately 36 MWe. Production zones for the power-plant wells are typically shallow (less than 1000'); of moderate temperature (~325°F); characterized by large, steeply dipping, well-connected fractures in granodiorite; and extremely permeable - test data indicate values of transmissivity exceeding 1,000 da-ft. Wells previously drilled here showed

This work was supported by the United States Department of Energy under Contract DE-AC04-94AL85000.

MASTER

DISTRIBUTION OF THIS DOCUMENT IS UNLIMITED

DISCLAIMER

This report was prepared as an account of work sponsored by an agency of the United States Government. Neither the United States Government nor any agency Thereof, nor any of their employees, makes any warranty, express or implied, or assumes any legal liability or responsibility for the accuracy, completeness, or usefulness of any information, apparatus, product, or process disclosed, or represents that its use would not infringe privately owned rights. Reference herein to any specific commercial product, process, or service by trade name, trademark, manufacturer, or otherwise does not necessarily constitute or imply its endorsement, recommendation, or favoring by the United States Government or any agency thereof. The views and opinions of authors expressed herein do not necessarily state or reflect those of the United States Government or any agency thereof.

DISCLAIMER

Portions of this document may be illegible in electronic image products. Images are produced from the best available original document.

temperature reversals (see Figure 1), with the maximum temperature shallower than 1000',

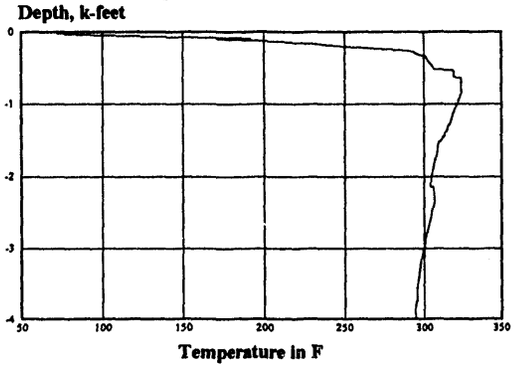

Figure 1 - Temperature log (with Sandia tool) in SNLG 87-29; Sept 22, 1993

however, a nearby power plant on another operator's lease draws from a reservoir at approximately 420°F, indicating that a hotter resource might lie beneath the one currently produced for the Far West power plants. Extensive previous development in this field meant that drilling conditions were reasonably well-known, but because most of the existing wells are shallow, there was an opportunity for slimhole exploration in search of a deeper, hotter reservoir.

The exploratory well (number SNLG 87-29) was specifically designed (see Figure 2) for

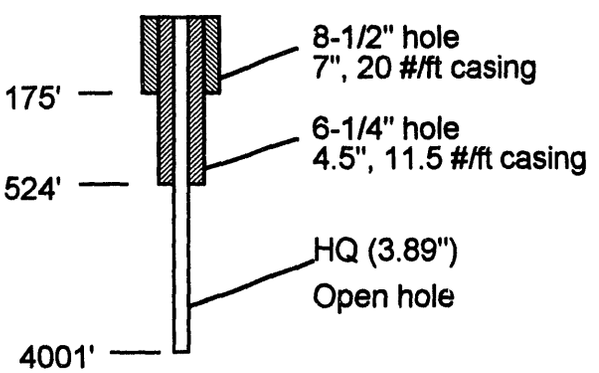

Figure 2 - Well design for SNLG 87-29

extensive production and injection tests so that those results could be compared with production and injection data from existing wells in this developed field. In fact, the exploratory well was drilled approximately 30 feet from an existing, but unused, production well. The principal objectives for the slimhole were development of slimhole testing methods, comparison of slimhole data with that from adjacent production-size wells, and definition of possible higher-temperature production zones lying deeper than the existing wells.

During the project we suspended drilling four times for a series of production/injection tests, each time taking downhole (pressure, temperature, spinner) and surface (wellhead pressure and temperature, James tube lip pressure, flow rate) data. These test series were done at well depths of 968, 1510, 2930, and 4000 feet. In general, the surface data, including a comparison of different flow rate measurement techniques, were consistent and repeatable. Downhole data were more difficult to compare because of some malfunctions in the logging tools and because the two logging service companies used different tools and different calibrations. By comparing the downhole readings with the corresponding surface data, and by comparing the service companies' tools with Sandia temperature logs, it appears that most of the ambiguities in the downhole data are resolved.

TEST RESULTS

The results discussed below are based on data from the first series of tests, conducted during August 5-6, 1993, at a total well depth of 968 feet. A large fracture system at 815' was verified by spinner measurements to be the primary production zone for this series of tests and was observed after completion of drilling to be the major feed zone for the 4001' well. Hence, the flow and injection tests conducted during this first series are representative of the performance observed in subsequent tests when the well was deeper.

Flow testing: In Figures 3, 4, and 5 the temperature, pressure, and spinner response

are plotted versus depth. These measurements were made at a total (liquid plus vapor) production rate of 7.1 kg/s (56,000 lb/hr). The liquid water flow rate was 100 gpm at 192°F (6.1 kg/s, 48,000 lb/hr). Numerical flow simulations are included in Figures 3 and 4 for comparison and are discussed later. The spinner response, which clearly shows a feed zone at 815', is proportional to the rotational speed of the impeller, but it was not calibrated as a quantitative measure of relative flow velocity.

Wellhead pressures, measured during production for all test series, are plotted versus total mass flow rate in Figure 6. Mass flow rate and total enthalpy were calculated from measurements made with James tubes of various diameters. Unsteadiness of the two-phase flow in the James tube and flash tank created significant scatter in the measurements of James tube lip pressure, flow rate, and wellhead pressure. Nevertheless, the data in Figure 6 are typical of two-phase flow from a liquid-dominated geothermal well.

Reservoir transmissivity: The fracture system at 815' has such large apparent permeability that only very small pressure increases were observed when relatively large volumes of water were injected. Difficulties with downhole instrumentation and with the injection equipment precluded an accurate estimate of reservoir transmissivity based on these injection tests, but we can estimate some reservoir properties by considering the downhole pressure response during flow rate changes in production tests.[2] During the first series of flow tests, very small, abrupt, changes in downhole pressure were observed when the flow rate was varied in relatively small increments. For flow rate changes between 6 and 16 gpm, pressure changes ranged from 338 to 470 Pa. If we assume steady-state conditions, the apparent effective transmissivity, or permeability-depth product *kh*, can be estimated from the Dupuit, or Theim, formula[3]

$$\Delta p = \frac{\mu \Delta Q}{2\pi kh} \ln \frac{r_o}{r_w},$$

where Δp is the pressure change, ΔQ is the change in volumetric flow rate, r_w is the well radius, and r_o is the outer radius of the reservoir. An arbitrary value of 100 m is selected for the outer radius, recognizing that the logarithmic term makes the Dupuit formula relatively insensitive to this parameter. Using the proper viscosity for these downhole conditions, the transmissivity is then estimated to lie in the range 160-600 da-m, with an average value of 400 da-m. In reservoirs with much lower apparent transmissivity, application of the Theis equation would be the preferred method to estimate reservoir properties.

It is informative to note that laminar, axisymmetric, creeping flow in a horizontal fracture is described by an equation similar to the Dupuit formula if the transmissivity is replaced with the quantity $b^3/12$, where b is the fracture aperture. Assuming flow occurs in a single fracture, and using the same numerical values used to estimate the transmissivity, the predicted fracture aperture lies in the range 1-4 mm, which is consistent with fractures observed in the core samples, but much less than the apparent size of the production zone based on drilling data (drillstring dropped approximately 2', without rotating, when it reached this interval). This indicates that, although we may have penetrated a large void, a much smaller fracture can carry the amount of fluid produced. It also indicates that the wellbore diameter, not the reservoir, was the parameter limiting flow rate.

Analysis of spinner data: Spinner data, in some cases, can be the most informative measurement taken in a flowing well. In holes which penetrate several potential production or injection zones, it is frequently difficult to analyze internal flow in the wellbore, and good spinner data can be extremely

useful in this aspect of interpretation. Interpreting spinner response is difficult, however, because the instruments are not usually calibrated to give absolute flow velocity, or even velocity relative to the tool, but instead to give a number of counts that measures how fast the impeller on the tool is rotating. In some instruments, such as those used in our tests, it is not even possible to determine flow direction relative to the tool.

There are, however, two features of the test configuration which make it possible to, in effect, calibrate the spinner after the fact: (1) the logging line speed, or tool velocity, is known in all cases, and (2) total mass flow rate is known and, in the casing where flow is single-phase, fluid velocity can be accurately calculated. Combination of the logging tool speed and absolute fluid velocity gives the fluid velocity relative to the logging tool, and repetition of this procedure at several flow rates produces a "calibration curve" for the spinner tool. In deriving these calibration curves, only the cases in which the relative fluid velocity was toward the bow of the spinner tool were considered; generally, we felt that the tool body shadowed the impeller when relative flow was from the tool's stern. Use of these calibration curves to analyze flow test data revealed that flow from the major production zone at 815' is divided, with the majority of the fluid going up the well and the remainder going down. The down-going flow rate, which varies from approximately 20 to 50 gpm, is a very weak function of the wellhead flow rate. The down-going flow velocity was less than the logging line speed, so that the relative velocity of the fluid was toward the bow of the tool.

Simulations: Numerical simulation of flow in a wellbore is critically dependent on the correlation or mathematical model used to describe the two-phase flow regime. Depending on well depth and temperature of the surrounding formation, representation of heat transfer between the formation and the wellbore may be equally important. We are currently investigating the computational packages described below for numerical simulation of flow in slimholes.

- GEM requires input of downhole pressure, formation-temperature profile, and wellhead pressure, and then calculates flow rate[4]. It allows simulations with no slip in the two-phase region or with either of the slip models proposed by Orkiszewski[5] and Hughmark.[6] In GEM, heat conduction in the surrounding formation is simulated using finite differences.

- WFSA requires input of downhole pressure, formation temperature, and flow rate, and then predicts wellhead pressure. It allows for multiple feed zones and the effects of dissolved solids, is based on the work of Hadgu[7], and uses a specially developed two-phase flow model. Heat transfer between the formation and the wellbore is described with an analytical model.

Both of these codes can be used to iterate a series of solutions with varying initial conditions to produce a curve of flow rate versus wellhead pressure, along with the associated predictions of downhole pressure and temperature. This predictive capability can be scaled up to a larger well in the same reservoir, if we assume that the downhole pressure remains the same. In this highly permeable situation, that assumption was valid, but in other reservoir types the pressure drawdown during production might seriously distort the predicted output. This phenomenon emphasizes the need for a coupled wellbore-reservoir simulator.

GEM and WFSA were used for our initial simulations of flow in the slimhole. In Figures 3 and 4, the pressure and temperature distributions with depth, assuming adiabatic flow, are compared with downhole measurements for the first test series (well depth is

968'). The GEM simulations used the Orkiszewski two-phase flow model. Most of the calculations are in good agreement with the measurements, but near the surface we suspect that unmodeled heat transfer mechanisms are responsible for the difference between predictions by WFSA and observed temperature distributions. The two-phase flow correlation used in GEM apparently causes it to under-predict wellhead pressure, as shown in Figures 4 and 6, and there is a slight variation of temperature with depth in the single-phase region, shown in Figure 3, as contrasted with the constant-temperature assumption in WFSA; otherwise, temperature and pressure distributions predicted with GEM differ little from those predicted with WFSA.

The agreement among the computational approaches and experimental data is reasonable, considering the variability of the measurements involved and the sensitivity of the simulations to the two-phase flow correlations employed. These comparisons should be viewed as preliminary since we are still evaluating various approaches to the simulation of wellbore flows.

Keeping all parameters except wellbore diameter fixed, GEM and WFSA predictions were applied to a full size production wellbore with diameter of 12.25 inches. For a mass flow rate of 62 kg/s, wellhead pressures of 56, 66, and 55 psia were predicted, respectively, with WFSA, GEM(Orkiszewski), and GEM(Hughmark). The flow rate of 62 kg/s corresponds to a 1990 test of the nearby 12.25" production well Hot Air-4 (HA-4), which produced 900 gpm of liquid water at a wellhead pressure of 72.5 psia. When corrected for flashing, that measured flow rate corresponds to a total mass flow rate of approximately 62 kg/s. The production from well HA-4 is associated with a production zone at 729', which is somewhat shallower than the slimhole production zone at 815'. However, tracer tests in the Steamboat Hills geothermal field indicate pervasive interconnections between fracture zones, so it does not seem unreasonable to expect similar production rates among nearby fracture zones. Based on a single test, simulation of a production well extrapolated from a slimhole tends to indicate a lower wellhead pressure at a specified mass flow rate than that observed experimentally. The results are, however, encouraging since the differences appear to be within a normal range of variation for the experimental measurements and the models used in the simulations.

CONCLUSIONS

The last two conclusions are specific to the Steamboat Hills geothermal field, the others relate to slimhole exploration in general.

1. Slimholes can be flow-tested, with successful surface and downhole measurements. Relatively cheap and simple surface measurements (James tube and weir box) can give flow rate and downhole enthalpy.
2. The strategy used for these tests appears to have produced the necessary test data, taken with appropriate accuracy, to evaluate the commercial potential of a larger well at this location..
3. Numerical simulation of flow in the wellbore can yield a predictive curve of flow-rate versus wellhead pressure, as shown in the slimhole data. Applied to a larger diameter well, this same simulation will give the same kind of production curve, giving a measure of the reservoir's commercial potential. Extrapolation from the slimhole data to the wellbore diameter of a near-by production well gave a reasonable estimate of the larger well's actual flow rate for a given wellhead pressure.
4. It is desirable to develop a coupled wellbore-reservoir simulator, and to extend this exploration strategy into other reservoir types, to validate the predictive capability of that model.
5. The deeper, hotter reservoir postulated in this location was not encountered down

to 4000'. There is, however, significant permeability below the 815' production zone, implying that water hotter than 300°F can be pumped from deeper zones, or water from a power plant could be injected into these zones.

6. The existing reservoir is extremely permeable; calculations of transmissivity are probably lower bounds.

RECOMMENDED FUTURE WORK

Although the test results here are encouraging, the highly fractured, highly permeable, reservoir may not be generally representative of other geothermal resources. The next step in the slimhole program should be exploratory drilling and testing in reservoirs with different flow characteristics, and comparison of those results with production wells in the new reservoirs. From preliminary negotiations with geothermal operators, we are confident that this can be done, given adequate funding in the near term.

DISCUSSION

Drilling is cheaper for slimholes than for production wells because the rigs, crews, locations, and drilling fluid requirements are all smaller; because site preparation and road construction in remote areas is significantly reduced, up to and including the use of helicopter-portable rigs; and because it isn't necessary to repair lost-circulation zones before drilling ahead. As a comparison, the Steamboat Hills slimhole, including all testing and overhead, cost approximately $150/foot while the neighboring production well (12.25" production diameter) cost $377/foot. Although the slimhole's greater total depth reduced its overall cost per foot, the intermediate cost of drilling the slimhole to the same depth as the large well was less than 60% of the large well's total cost.

If the resource evaluation program calls for production or injection tests from an exploratory well, these are also easier with a slimhole because they involve handling much less fluid than a larger well. Finally, the same attributes that reduce the cost also greatly reduce the environmental impact. As exploration expands into new areas such as the Pacific Northwest, this may become the critical criterion in regulatory agencies' decisions on whether to issue permits. This technology appears to be the best hope of increasing exploration in an attempt to enlarge the nation's proven geothermal reserves.

REFERENCES

1. J. Combs and J. C. Dunn, "Geothermal Exploration and Reservoir Assessment: The Need for a US Department of Energy Slimhole R&D Program in the 1990s", Geothermal Resources Council BULLETIN, Nov 1992, pp.329-337
2. Teklu Hadgu, et. al., "Preliminary Report on Recent Injection and Flow Tests in Well SNLG 87-29 Steamboat Hills Geothermal Field, Nevada," Draft, Lawrence Berkeley Laboratory, Berkeley, CA, Dec. 1993
3. G. de Marsily, *Quantitative Hydrogeology*, Academic Press, Orlando, FL, 1986, pp. 147-149
4. R. C. Dykhuizen and R. R. Eaton, Modeling of Geothermal Wells With GEM, Memo to J. C. Dunn and J. T. Finger, dtd. 1/8/93, Sandia National Laboratories, Albuquerque, NM
5. H. Orkiszewski, "Predicting Two-Phase Pressure Drops in Vertical Pipe," J. Petr. Tech. 1980, pp. 829-838.
6. G. A. Hughmark, "Holdup in Gas-Liquid Flow," Chem., Engr. Prog.., **58**(4), 1962, pp. 62-65.
7. T. Hadgu, *Vertical Two-Phase Flow Studies and Modelling of Flow in Geothermal Wells*, PhD Thesis, Univ of Auckland, New Zealand, 1989

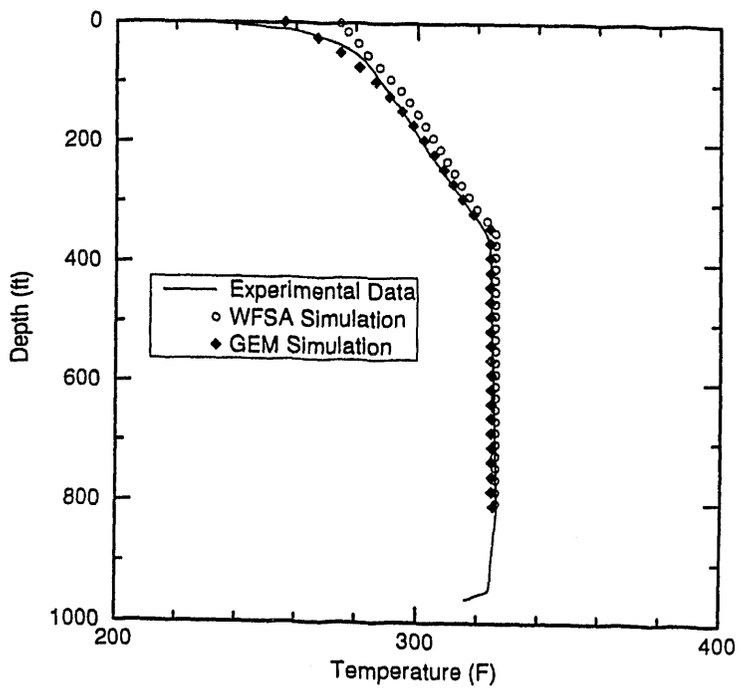

Figure 3. Downhole temperature versus depth: field data and numerical simulation.

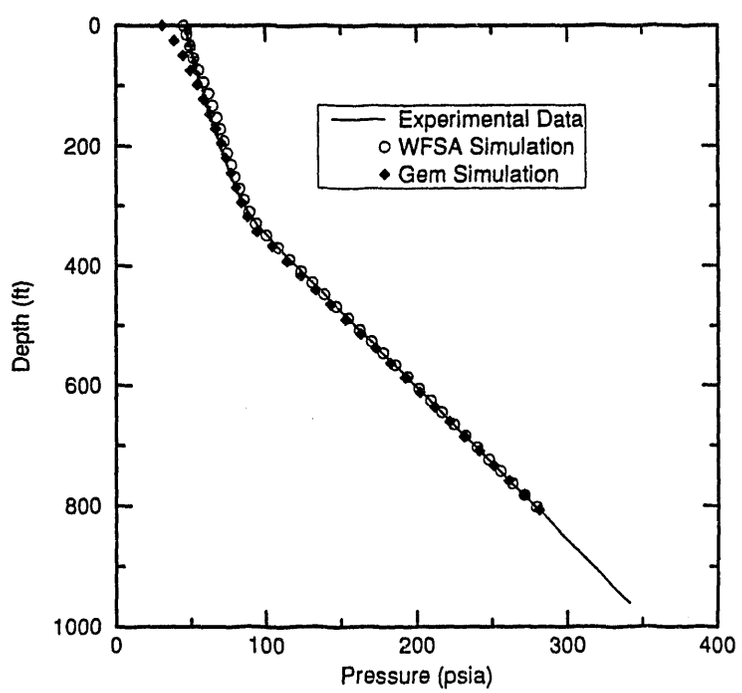

Figure 4. Downhole pressure versus depth: field data and numerical simulation.

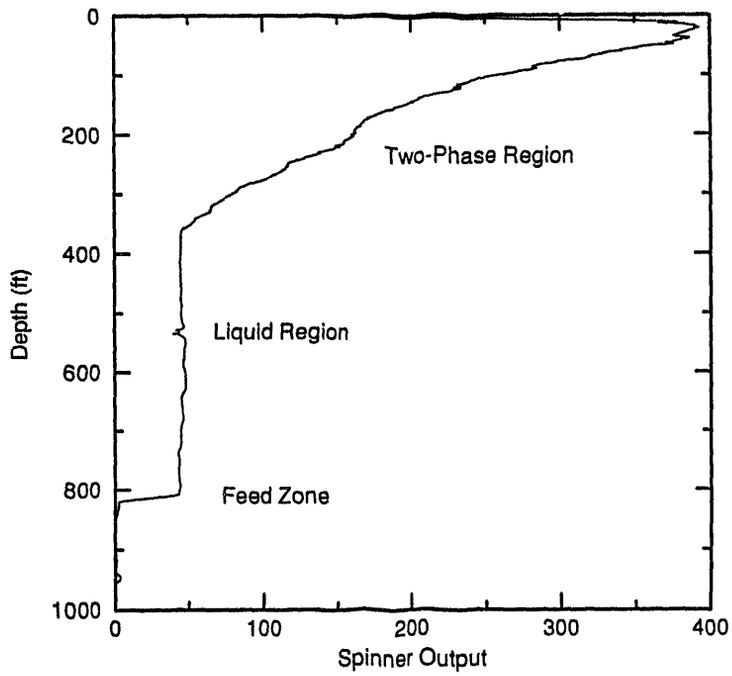

Figure 5. Spinner response versus depth while flowing 56,000 lb/hr.

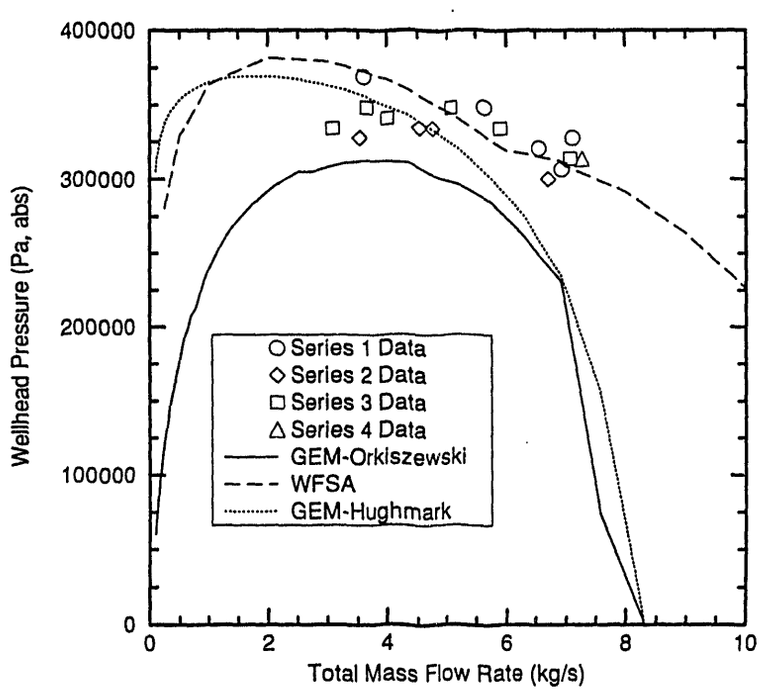

Figure 6. Wellhead pressure versus mass flow rate: field data and numerical simulation.