AIIM

Association for Information and Image Management

1100 Wayne Avenue, Suite 1100
Silver Spring, Maryland 20910

301/587-8202

Centimeter

Inches

MANUFACTURED TO AIIM STANDARDS
BY APPLIED IMAGE, INC.

1 of 1

Conf-940980--1
SAND93-2785C

RECEIVED
MAR 21 1994
OSTI

MEASURED FIELDS AND EARTH POTENTIALS AT 10 AND 20 METERS FROM THE BASE OF TRIGGERED LIGHTNING CHANNELS

Richard J. Fisher George H. Schnetzer Marvin E. Morris

Sandia National Laboratories
Albuquerque, New Mexico 87185-0865
USA

ABSTRACT

Vertical electric fields, azimuthal magnetic fields, and earth voltages developed over a 0.5-m radial step distance have been measured at 10 and 20 m from the ground attachment point of triggered lightning. The magnetic fields are found to follow Ampere's law closely, in both amplitude and waveform. The relationship between maximum vertical electric field change due to a descending dart leader and the peak of its associated return-stroke current is linear. Recorded earth step voltages have the same waveforms as the incident return-stroke currents and, for distances between 10 and 20 m from the strike point, their amplitudes exhibit a 1/r dependence. Statistics are given on the observed occurrence of radial surface ground arcs emanating from the earth attachment point as a function of peak incident return-stroke current.

1.0 INTRODUCTION

A detailed knowledge of the electromagnetic environment very close to the ground strike point of lightning is of considerable importance in designing protection systems and in assessing their effectiveness. The specific motivation for the present work was related to the protection of munitions that might be exposed to lightning, possibly at the scene of a transportation accident, for example. The availability of triggered lightning provides a very convenient method for obtaining real lightning flashes to designated points on the ground. Using this technique, the electromagnetic environments at stations located 10 and 20 m from the bases of triggered lightning channels were measured. The quantities that were recorded included vertical electric field (E_V), horizontal (azimuthal) magnetic field (H_a), and earth step potential differences (V_S) developed over 0.5-m radial increments. During the summer of 1993, seven flashes were triggered in support of these experiments. Data were acquired on a total of 31 individual return strokes, with a range of peak return-stroke current amplitudes from 4.3 to 30 kA. The experiments were carried out at Ft. McClellan, Alabama at a flat test site that was freshly cleared of pine woods vegetation within 45 days of the beginning of the testing. The soil composition was heavy red clay, with an average conductivity of 1.8×10^{-3} S/m, the mean value derived from standard four-probe resistivity measurements conducted daily at 5 different locations throughout the fifty day fielding period. The general site layout is shown in Fig. 1. Rocket launching and data recording operations were carried out using the Sandia Transportable Triggered Lightning Instrumentation Facility (SATTLIF), the details of which are described elsewhere /1,2/.

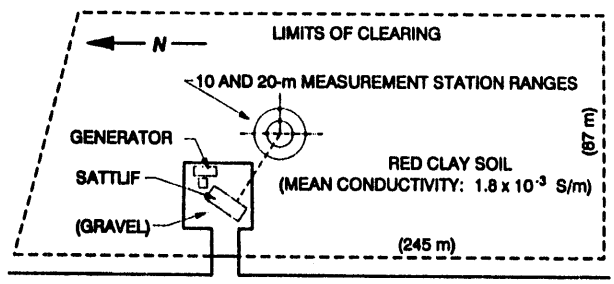

Figure 1. Overview of the 1993 Triggered lightning test site

2.0 EXPERIMENTAL PROCEDURES

A total of 5 monitoring stations were arrayed at 10- and 20-m radial distances from the base of the rocket launcher assembly (RLA), which served as the designated strike point for the triggered flashes. It was arranged that flash currents striking the RLA would flow to earth through the coaxial current shunt mounted below the main supporting frame of the launcher. The earthing point consisted of a zinc-coated steel ground rod below the steel instrumentation box that contained the current shunt and its associated fiber optic transmitter electronics. The ground rod depth was intentionally kept to a minimal length to simulate a strike to raw earth as closely as possible. Data were acquired during four separate storms. During the first two storms, the ground rod depth was 0.3 m, while for the last two, it was changed to 1.3 m.

Over the course of the summer, data were acquired at each of the monitoring stations indicated in Fig. 2. During the first and second storms, an identical complement of sensors was

MASTER

DISTRIBUTION OF THIS DOCUMENT IS UNLIMITED

deployed at stations 1 through 3. The sensors, shown in Fig. 3, consisted of a commercial magnetic field derivative detector (plus in-line active integrator), a flat plate vertical electric field sensor, and an earth step potential sensor with its two 0.3-m long probes separated by a distance of 0.5 m. Stations 1, 2, 4, and 5, comprised of different combinations of sensors as defined in Fig. 2, were activated during storms 3 and 4. In this way data were obtained as functions of radial distance (10 and 20 m) and of azimuth at the multiple monitoring positions around the 10- and 20-m arcs.

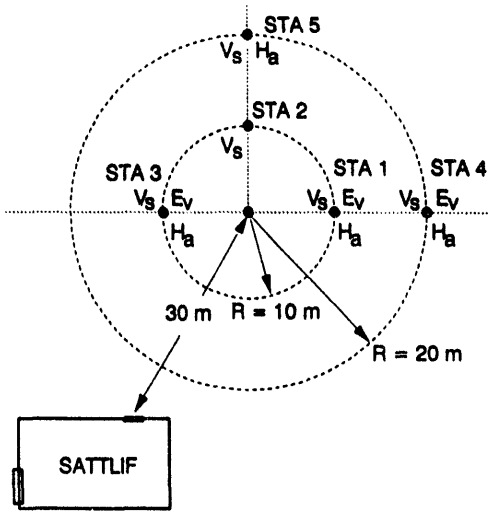

Figure 2. Measurement locations and their assigned sensor groups (Station 2 consisted of V_s sensor only during storms 3 and 4; otherwise it was comprised of full set of sensors)

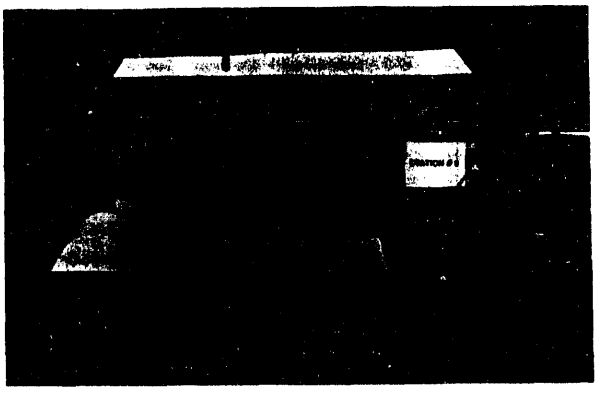

Figure 3. Baseline instrumentation set. Left to right: magnetic field derivative, earth step voltage, and vertical electric field sensors

With the exception of the earth step potential measurement, the sensors, signal conditioning, data transmission links, and recording instrumentation were all substantially the same as were employed previously during the triggered lightning test of a munitions storage bunker that was conducted during 1991 /2/. The technique used in measuring the earth step potentials is described below in the discussion of the experimental results. All of the data presented herein were recorded digitally with a 40-ns sampling interval. The 3-dB upper frequency limit of the incident stroke current measurements was 6 MHz, which was set by the frequency response of the current shunt. The upper frequency limit of the rest of the measurements was 10 MHz.

3.0 DATA

3.1 Magnetic Fields

Plotted in Fig. 4 are the peak values of the azimuthal magnetic fields measured at 10.7 and 20.7 m as a function of the peak amplitudes of their associated return-stroke currents. Linear regression lines are displayed for the data sets corresponding to each distance. Ampere's law applied to this situation is given by the relationship,

$$H(t) = I(t)/(2\pi r) \qquad (1)$$

where H(t) is the magnitude of the azimuthal component of the magnetic field, I(t) is the current flowing in the channel, and r is the radial distance from the strike point. In the figure, curves corresponding to (1) are plotted as solid lines for each distance. As can be seen from the figure, there is very close agreement between this relationship and the experimental data.

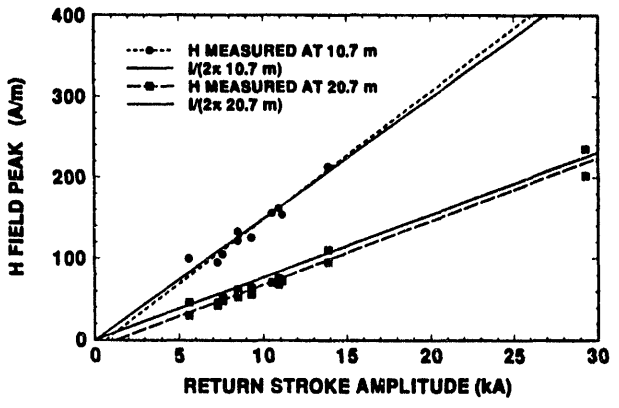

Figure 4. Comparison of Ampere's law with magnetic fields measured at 10.7 and 20.7 m from the strike point

The correspondence between the waveshapes of the incident stroke current and their associated magnetic fields is exemplified in Fig. 5, which is an overlay of the normalized waveforms of the magnetic fields at the two 20.7-m stations and the incident stroke current recorded during the first stroke of flash 93-12. As is indicated in the figure, the waveshapes match so closely that it is difficult to distinguish that there are three separate plotted traces. The degree of agreement characterized by the data in Fig. 5 is typical of all the data that have been examined in this fashion.

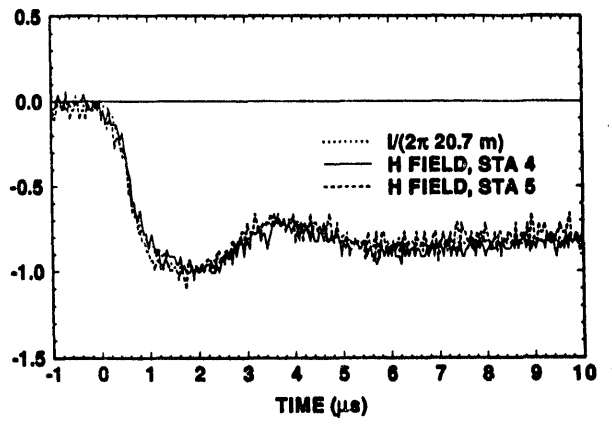

Figure 5. Overlay of normalized magnetic field and incident return-stroke current waveshapes (Stroke 1 of Flash 93-12)

3.2 Vertical Electric Fields

Figure 6 is a plot of a typical vertical electric field change recorded at 9.3 m from the base of a stroke that was initiated by a dart leader. The V shape of the waveform is characteristic of electric field changes out to well beyond 500 m /3/. The rate of change and peak amplitude of the wavefront preceding the bottom of the V is associated with the propagation velocity and linear charge density, respectively, of the descending dart leader. The rapid change following the peak corresponds to neutralization of leader charge as the return-stroke wavefront propagates up the channel from the ground.

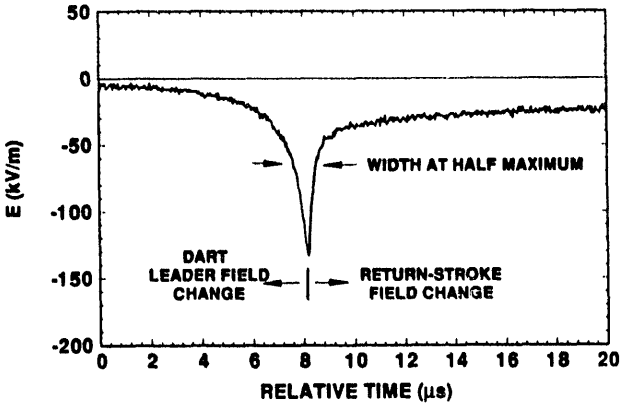

Figure 6. Typical electric field change recorded 9.3 m from the base of a return stroke preceded by a dart leader

Presented in Fig. 7 is a plot of recorded peak return-stroke currents against their preceding dart leader electric field changes, as measured at 9.3 and 19.3 m from the channel. The evident linearity (correlation coefficients of 0.7 and 0.95 at the 9.3 and 19.3-m stations, respectively) is presumably a consequence of the fact that peak return-stroke current amplitude is proportional to the change per unit length deposited by the dart leader over the last 100 m or so of its channel. Assuming a uniform linear charge distribution, the proportionality constant is the return-stroke propagation velocity.

On two occasions, measurements were obtained of electric field changes on strokes preceded by dart-stepped leaders,. One example is given Fig. 8. In both instances, the strokes were the final ones in their respective flashes, and both were preceded by extraordinarily long interstroke intervals, namely

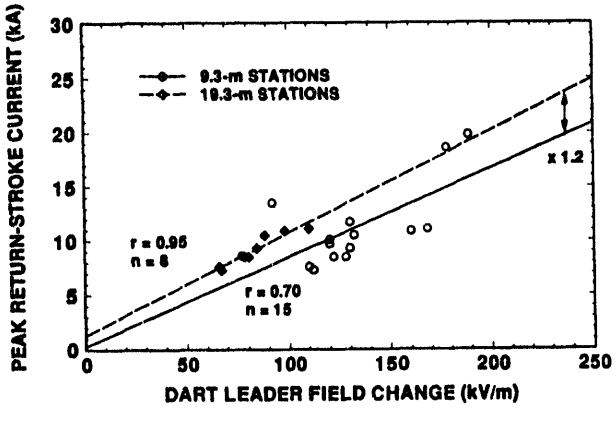

Figure 7. Peak return-stroke current as a function of peak dart leader electric field changes recorded 9.3 and 19.3 m from the ground strike point

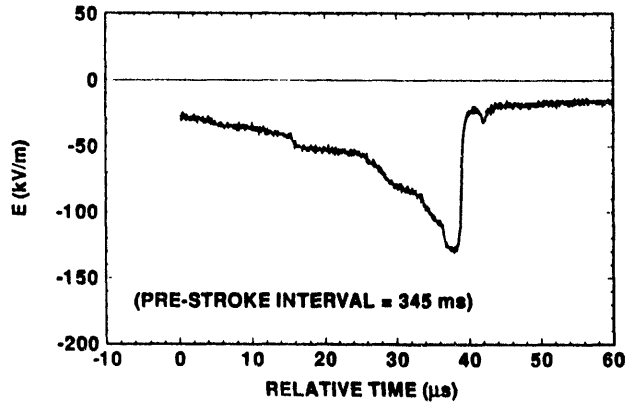

Figure 8. Example of an electric field change recorded 9.3 m from the base of a return stroke preceded by a dart-stepped leader

345 and 290 ms, respectively. (The median value interstroke interval in triggered flashes in Florida and Alabama is 48 ms /4/.) The mean interval between steps in the two examples that were obtained is 6.3 μs, a value consistent with data for dart-stepped leaders occurring during the last tens of microseconds prior to return strokes in naturally initiated lightning in Florida (6.5 μs) and Arizona (7.8 μs) /5/.

3.3 Radial Earth Step Voltages

The technique employed in measuring voltages developed by return-stroke currents injected into the earth at the base of the rocket launcher is shown in Fig. 9. An adequate equivalent circuit of this measurement is shown in Figure 10. Because the impedance of the instrumentation circuit is so much higher than the source impedance presented by the earth at the probe terminals, the earth voltage is unperturbed by the presence of the measurement circuit. Stray magnetic and electric field coupling into the measurement circuit was not found to be a problem.

The major results are summarized in Fig. 11, in which the peak voltages recorded at the 10 and 20-m stations are plotted against peak return-stroke current. As is evident, the voltages are highly linear with respect to the stroke currents that produced them (correlation coefficients of 0.97 at 10 m and 0.98 at 20 m). In those cases for which multiple-station data are available, the voltages from the different stations agree very closely in both amplitude and waveshape. From this it is inferred that the spatial distribution of current density flowing within the earth outward from the injection point must be essentially uniform. Perhaps more precisely stated, there appear to be no significant net effects from any local nonuniformities in that current distribution. This result

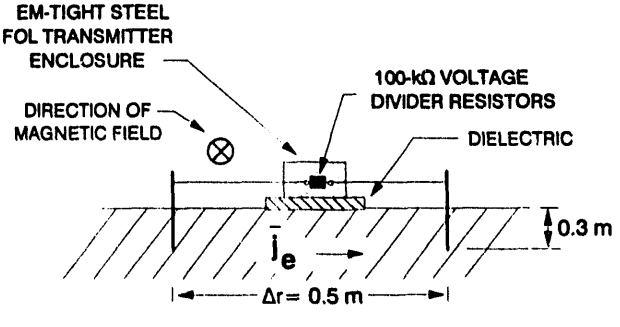

Figure 9. Technique used to measure radial earth step voltages

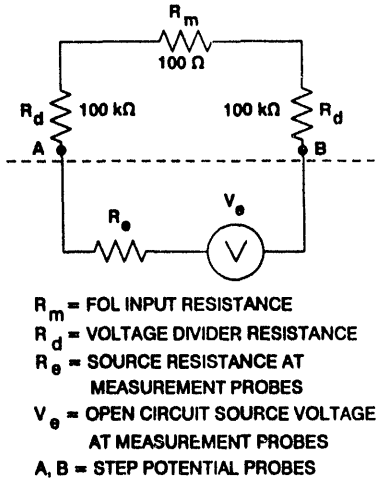

Figure 10. Equivalent circuit model of the earth step voltage measurement of Fig. 9

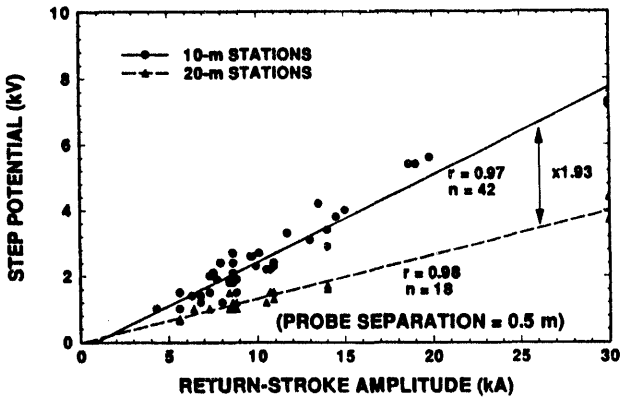

Figure 11. Peak earth voltages developed over a 0.5-m step distance measured at 10 and 20 m from the triggered lightning strike point plotted against peak return-stroke current

would, of course, not hold in the presence of any buried conductors, such as pipes, cables, or even major tree roots; but this condition was intentionally avoided during the present experiments. As shown by the example in Fig. 12, for practical purposes, the waveshapes of the recorded voltages are virtually identical to those of their associated stroke currents. This level of agreement was typical of most of the data that were examined in this fashion, although in some of the records of very low amplitude, the step voltage waveforms were slightly distorted with respect to those of the incident stroke current. This distortion under low signal-to-noise conditions is tentatively being ascribed to the effects of vertical electric field coupling into the connecting leads of the sensors. For practical purposes, the waveforms of the voltages and the incident stroke currents can be taken to be the same.

Perhaps the most interesting feature of these data is the rate at which they scale with distance from the strike point. Based on the fitted regression lines in Fig. 11, this dependence is very close to 1/r between the 10-m and 20-m stations. This is contrary to the expectation of a $1/r^2$ functionality that would be predicted by the uniform hemispherical model of earth current density that is often employed to define earth step potentials close to a strike point. An alternative model is proposed, which produces very good agreement with the present data. This model, depicted in Fig. 13, involves the assumption of a thin surface layer of much higher conductivity than that of the bulk of the earth below it. For values of bulk earth conductivity representative of those measured at the individual sensor stations, the resistance of the surface layer, acting in parallel with that of the half-space of earth beneath it, reproduces the observed behavior in the present data to within about 10 percent at both stations. The high conductivity surface layer is taken to correspond to standing rain water that was present over a large portion of the experiment site during the course of the triggering sessions. Unfortunately, with the limited amount of presently available data, it is not yet possible to validate this, or any other, model with certainty.

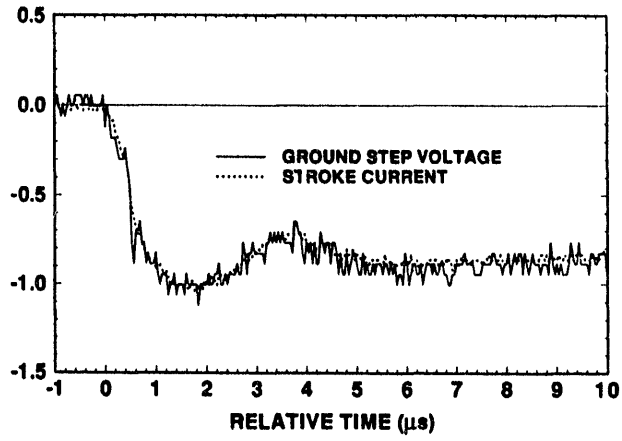

Figure 12. Overlay of normalized waveshapes of incident return-stroke current and step voltage recorded 10 m from the strike point (Stroke 1 of Flash 93-12)

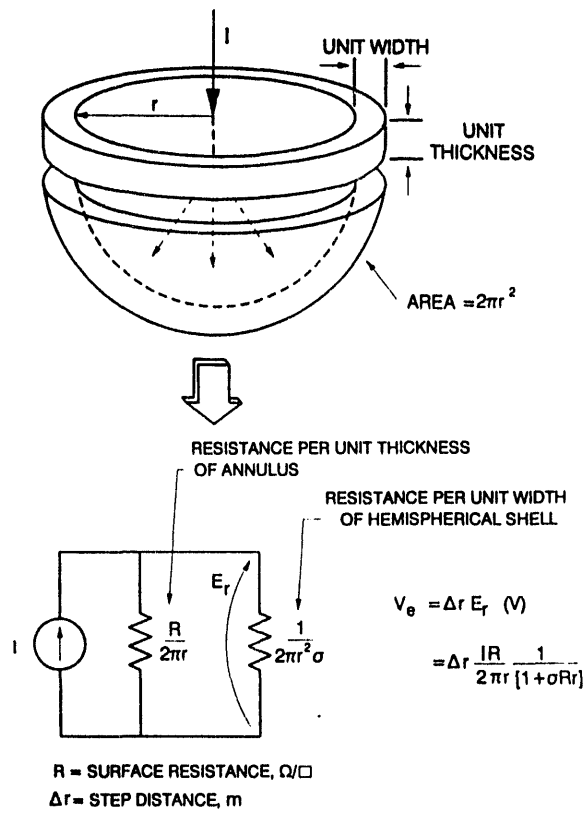

Figure 13. Geometry and resulting circuit model for earth step voltage that accounts for the presence of a thin, high conductivity surface layer

3.4 Radial Surface Arcing

In addition to the active electrical measurements described above, numerous video records were taken from various angles and with different fields of coverage. Sixteen-millimeter high speed movies with 5-ms time resolution were also obtained on 5 of the 7 triggered flashes. These records revealed the frequent occurrence of substantial radial surface arcing outward from the ground attachment point. As indicated in Fig. 14, significant arcing was detected on 100 percent of all strokes with peak currents of 15 kA or greater, as well as on a significant fraction of strokes with currents below that level. The arcing appeared to be random in direction. Not every stroke in the same flash produced detectable arcs; and, during some flashes, arcs occurred in one direction on one stroke and in another direction on some other stroke. Following each storm, the area around the base of the RLA was carefully examined for residual evidence of arcing. With the exception of localized occurrences of splintering in pieces of plywood, which were placed on the ground to avoid standing in mud when working around the launcher, no such evidence was observed. Nor were any fulgurites found when the earthing rod was either removed or changed. What was observed, however, was distinct evidence of discrete, concentrated current exit points at several spots along the length of the steel earthing rods after they were removed from the ground.

During one particular stroke of 20-kA peak amplitude, the station 1 instrumentation site was contacted by one branch of a surface arc. Analysis of the behavior of the various sensors at that station indicated that the arc carried approximately 1 kA of current, or about 5 percent of the peak value of current in that stroke. The most impressive photograph of this arcing phenomenon that was obtained is shown in Fig. 15. Near the right edge of the photograph represents a distance of 10 m from the strike point under the RLA. The horizontal branch of the arc can be seen to have reached this range. As deduced from excursions in the signals recorded at one or more of the 20-m station sensors on two other occasions, a range of at least 20 m was attained by some of the arcs. Whether this distance was ever exceeded cannot be determined with certainty from the present data. Of considerable interest would be the determination of the radial limit of surface arcs as a function of return-stoke amplitude.

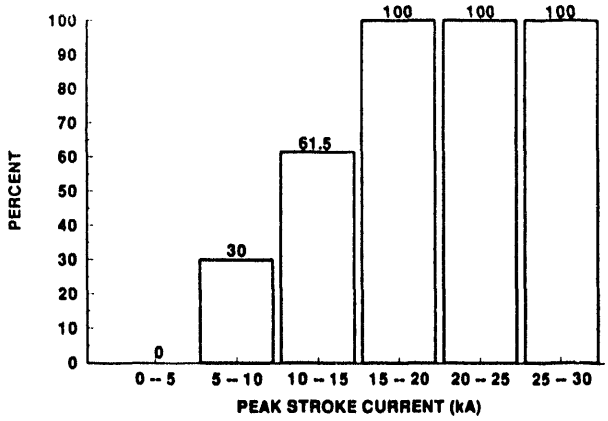

Figure 14. Frequency of detected surface arcing from the base of poorly earthed triggered lightning channels as a function of peak return-stroke current amplitude

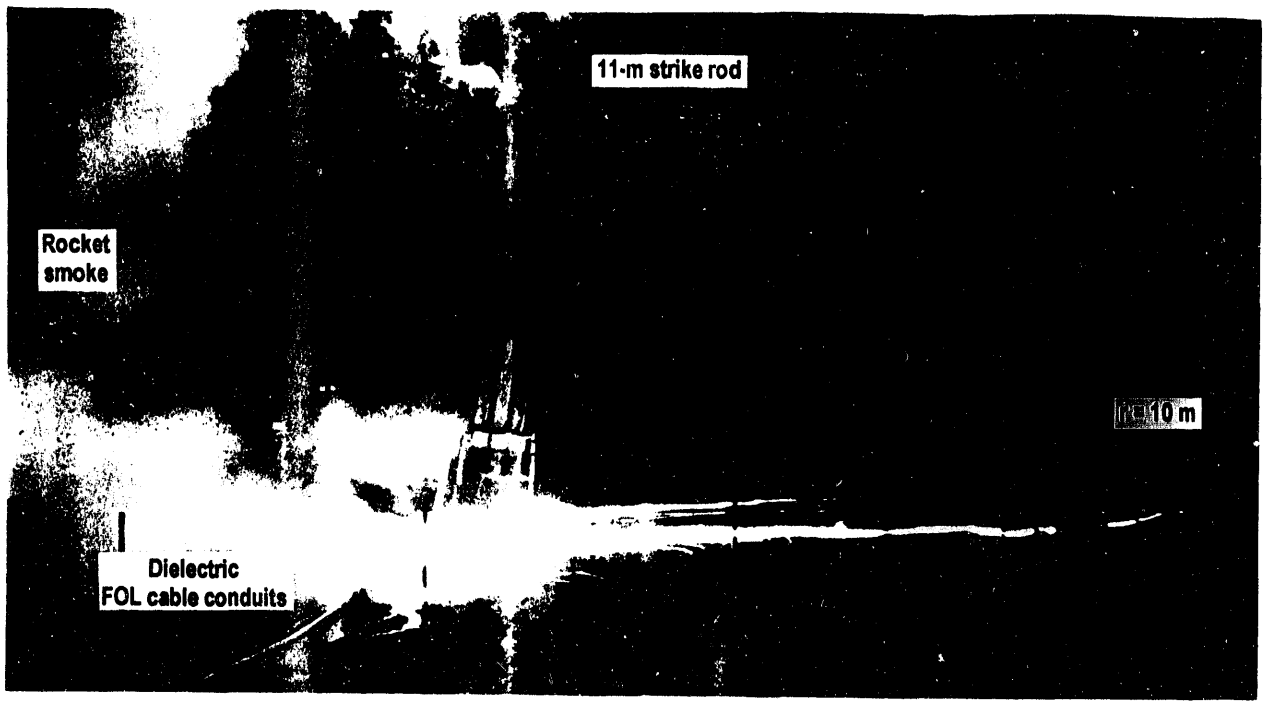

Figure 15. Still photograph of radial branched surface arcing from the base of triggered lightning channel; the observed arcing occurred on the second stroke (peak current of 29.6 kA) of Flash 93-12. (Attachment of the return stroke to the top of the strike rod is outside the field of view.)

4.0 CONCLUSIONS

Analysis of the data performed to date has resulted in the following conclusions:

1. The magnetic field at ground level out to a range of at least 20 m from the base of a lightning channel is well described by Ampere's law.
2. Subsequent return-stroke current amplitudes are linear with respect to the peak electric field changes produced by the dart leaders that initiate them.
3. Vertical electric field change amplitudes as high as 300 kV/m, occurring with rise times of the order of a few microseconds, can be experienced at a range of 20 m from a lightning channel which is carrying a return-stroke current of 30 kA. (If the linear relationship of item 2 is assumed to apply, a field change in excess of 2 MV/m would precede a 200-kA subsequent return stroke.)
4. Earth step potentials measured at 10 and 20 m from the strike point are linear with return-stroke current and have the same waveshapes as their associated return-stroke currents. Over the range of 10 to 20 m, their magnitudes fall off as 1/r.
5. The likelihood of significant radial surface arcing out to ranges well in excess of 20 m must be considered to be part of the hazardous environment close to the base of a lightning channel, even in areas of relatively high earth conductivity. Individual branches of such arcs can carry appreciable fractions of the peak value of the return-stroke current.

5.0 ACKNOWLEDGMENTS

This work was supported by the US Department of Energy under Contract DE-AC04-94AL85000 and by the US Department of the Army, Armament Research, Development and Engineering Center, Picatinny Arsenal. The circuit model for earth step voltages given in the text and the rigorous mathematical development on which it is based were provided by L.K. Warne, Sandia National Laboratories.

6.0 REFERENCES

/1/ G.H. Schnetzer and R.J. Fisher, "The Sandia Transportable Triggered Lightning Instrumentation Facility," Int. Aerospace and Ground Conference on Lightning and Static Electricity, Cocoa Beach, April 16-19, 1991.

/2/ G.H. Schnetzer and R.J. Fisher, "Measured Responses of a Munitions Storage Bunker to Rocket-Triggered Lightning," 21st Int. Conf. On Lightning Protection, Berlin, September 22-25, 1992.

/3/ M.A.Uman, V.A. Rakov, R. Thotappillil, T. Versaggi, A. Eybert-Berard, L. Barret, P.P. Barker, and S.P Hnat, "Multiple-Station Measurements of Close Electric and Magnetic Fields Produced by Triggered Lightning Discharges," Fall Meeting of the American Geophysical Union, San Francisco, December 1993.

/4/ R.J.Fisher, G.H. Schnetzer, R. Thottappillil, V.A. Rakov, M.A. Uman, and J.D. Goldberg, "Parameters of Triggered Lightning in Florida and Alabama," *J. Geophys. Res.*, **98**, 22, 8887-22,902, 1993.

/5/ E.P. Krider, C.D. Weidman, and C.R. Noggle, "The Electric Fields Produced by Lightning Stepped Leaders," *J. Geophys. Res.*, **82**, 951-960, 1977.

DISCLAIMER

This report was prepared as an account of work sponsored by an agency of the United States Government. Neither the United States Government nor any agency thereof, nor any of their employees, makes any warranty, express or implied, or assumes any legal liability or responsibility for the accuracy, completeness, or usefulness of any information, apparatus, product, or process disclosed, or represents that its use would not infringe privately owned rights. Reference herein to any specific commercial product, process, or service by trade name, trademark, manufacturer, or otherwise does not necessarily constitute or imply its endorsement, recommendation, or favoring by the United States Government or any agency thereof. The views and opinions of authors expressed herein do not necessarily state or reflect those of the United States Government or any agency thereof.

ADDRESS OF AUTHOR

Richard J. Fisher
Sandia National Laboratories
Albuquerque, New Mexico 87185-0865
USA

DATE
FILMED
8/4/94

END