0/14-94 gso①

SANDIA REPORT

SAND93—1959 • UC—237
Unlimited Release
Printed November 1993

Applications of Solar Reforming Technology

Irving Spiewak, Craig E. Tyner, Ulrich Langnickel

Prepared by
Sandia National Laboratories
Albuquerque, New Mexico 87185 and Livermore, California 94550
for the United States Department of Energy
under Contract DE-AC04-94AL85000

DISTRIBUTION OF THIS DOCUMENT IS UNLIMITED

Issued by Sandia National Laboratories, operated for the United States Department of Energy by Sandia Corporation.

NOTICE: This report was prepared as an account of work sponsored by an agency of the United States Government. Neither the United States Government nor any agency thereof, nor any of their employees, nor any of their contractors, subcontractors, or their employees, makes any warranty, express or implied, or assumes any legal liability or responsibility for the accuracy, completeness, or usefulness of any information, apparatus, product, or process disclosed, or represents that its use would not infringe privately owned rights. Reference herein to any specific commercial product, process, or service by trade name, trademark, manufacturer, or otherwise, does not necessarily constitute or imply its endorsement, recommendation, or favoring by the United States Government, any agency thereof or any of their contractors or subcontractors. The views and opinions expressed herein do not necessarily state or reflect those of the United States Government, any agency thereof or any of their contractors.

Printed in the United States of America. This report has been reproduced directly from the best available copy.

Available to DOE and DOE contractors from
Office of Scientific and Technical Information
PO Box 62
Oak Ridge, TN 37831

Prices available from (615) 576-8401, FTS 626-8401

Available to the public from
National Technical Information Service
US Department of Commerce
5285 Port Royal Rd
Springfield, VA 22161

NTIS price codes
Printed copy: A03
Microfiche copy: A01

SAND93-1959
Unlimited Release
Printed November 1993

Distribution
Category UC-237

Applications of Solar Reforming Technology*

Irving Spiewak
Weizmann Institute of Science (WIS)
Rehovot, Israel

Craig E. Tyner
Sandia National Laboratories (SNL)
Albuquerque, New Mexico
USA

Ulrich Langnickel
Deutsche Forschungsanstalt für Luft-und Raumfahrt (DLR)
Köln, Germany

ABSTRACT

Research in recent years has demonstrated the efficient use of solar thermal energy for driving endothermic chemical reforming reactions in which hydrocarbons are reacted to form synthesis gas (syngas). Closed-loop reforming/methanation systems can be used for storage and transport of process heat and for short-term storage for peaking power generation. Open-loop systems can be used for direct fuel production; for production of syngas feedstock for further processing to specialty chemicals and plastics and bulk ammonia, hydrogen, and liquid fuels; and directly for industrial processes such as iron ore reduction. In addition, reforming of organic chemical wastes and hazardous materials can be accomplished using the high-efficiency destruction capabilities of steam reforming. To help identify the most promising areas for future development of this technology, we discuss in this paper the economics and market potential of these applications.

KEYWORDS

Solar thermal energy, methane reforming, applications, markets, gasification, waste detoxification.

MASTER

* This work was supported in part by the U.S. Department of Energy under Contract DE-AC04-76DP00789, by the Weizmann Institute of Science Solar Facilities Unit, and by the German BMFT as parts of the SOTA and SOLEP programs under contracts 0328823A and 0329286A.

DISTRIBUTION OF THIS DOCUMENT IS UNLIMITED

CONTENTS

Page

1. INTRODUCTION 1
    1.1 Solar Thermal Background 1
    1.2 Reforming and Gasification Background. 2
        1.2.1 History 2
        1.2.2 Commercial Production of Syngas 3
    1.3 The Potential for Solar Thermochemistry 5
2. SOLAR REFORMING AND GASIFICATION TECHNOLOGY STATUS 6
    2.1 General Research and Development in Solar Reforming 6
    2.2 Solar Reforming Concepts 7
    2.3. Solar Reforming Experiments 8
        2.3.1 CAESAR: Solar Carbon Dioxide Reforming of Methane 8
        2.3.2 ASTERIX: Solar Steam Reforming of Methane 11
        2.3.3 The Weizmann Institute Tubular Reformer/Receiver 14
        2.3.4 Soltox 15
    2.4 Solar Gasification Technology 18
        2.4.1 DLR Gasification Studies 19
3. POTENTIAL APPLICATIONS 21
    3.1 Closed Loop Reforming/Methanation 21
        3.1.1 System Description 21
        3.1.2 Syngas Storage 23
    3.2 Open-Loop Syngas Production 23
        3.2.1 Production of Power Plant Fuels 24
        3.2.2 Products Derived from Syngas 25
    3.3 Hazardous Waste Detoxification 27
4. CROSSCUTTING ISSUES 28
    4.1 Resources and Environment 28
    4.2 National Security Issues 30
    4.3 Public Acceptance 31
    4.4 Costs 31
5. SUMMARY AND CONCLUSIONS 39
6. REFERENCES 40

FIGURES

Page

1. CAESAR unit in operation. 9
2. Schematic diagram of the CAESAR reformer/receiver. 10
3. Process flow diagram of ASTERIX (100%-load case). 12
4. Temperature behavior along the ASTERIX reformer tube. 14
5. ASTERIX transient test. 15
6. The Weizmann Institute solar chemical pilot plant. 16
7. The Weizmann Institute 480-kW tubular reformer/receiver. 17
8. Conceptual solar gasification process. 18
9. Design concept of an allothermal gasifier. 20
10. Utilization of solar energy in the MBG process. 20
11. Chemical storage system combined with a solar power plant 22
12. Solar-assisted methanol plant. 26
13. Solar-assisted ammonia plant. 26
14. Map of annual solar energy resources. 30

TABLES

1. Results of the Steady State ASTERIX Tests (m_{air} = 525 kg/hr) 13
2. Global Carbon Balance. 29
3. Carbon Dioxide Emissions from Gas Turbine/Combined Cycle Plants. 29
4. Gas-Turbine Solar Power Plant Costs. 32
5. Conventional Methods of Syngas Production. 33
6. Solar Thermochemical Syngas Production from Natural Gas. 34
7. Solar Thermochemical Syngas Production from Biomass. 35
8. Solar Thermochemical Syngas Production from Coal. 36
9. Solar Power Plants with Energy Storage. 38

1. INTRODUCTION

Research in recent years has demonstrated the efficient use of solar thermal energy for driving chemical reforming reactions. In these highly endothermic reactions, hydrocarbons are reacted with steam or carbon dioxide (CO_2) over a catalyst to form a synthesis gas (syngas) composed primarily of hydrogen (H_2) and carbon monoxide (CO). The solar heat is applied to the reactor either indirectly through a working fluid (such as air heated in a solar receiver) or directly via reactor tubes or a porous catalytic reactor exposed to concentrated solar radiation. In open-loop systems, a hydrocarbon feedstock (e.g., natural gas, pyrolized or gasified coal or oil shale, or low-quality hydrocarbon gases or waste) is upgraded in energy content with solar energy for uses described below. In closed-loop systems, a high-quality hydrocarbon feedstock such as methane (CH_4) is converted to syngas via solar reforming; the syngas is then stored or transported off-site prior to conversion back to CH_4 in a methanation reactor that recovers the solar energy as heat for industrial processes or power generation.

Open-loop systems can be used for direct fuel production (for gas turbines or fuel cells); for production of syngas feedstock for further processing to specialty chemicals and plastics and bulk ammonia (NH_3), H_2, and liquid fuels (methanol [CH_3OH] and gasoline); and directly for industrial processes such as iron ore reduction. Closed-loop solar reforming of CH_4 and energy recovery in a methanator is a method for storage of solar energy that would match the short-term storage requirements of steam-cycle power plants for peaking power generation or provide longer-term storage and/or thermal energy transport over moderate distances to multiple sites for process heat applications (between, for example, high-insolation solar collection sites and major industrial centers). In addition, reforming of organic chemical wastes and hazardous materials can be used, not for the energy value, but for the efficient destructive capabilities of steam reforming to convert chemical waste into simple, nontoxic compounds. To help identify the most promising areas for future development of this technology, we discuss in this paper the economics and market potential of these applications, as well as the ability of solar reforming to match the needs of potential users and industries.

1.1 Solar Thermal Background

The first large-scale use of concentrating solar-thermal technology was for generating electric power, primarily for peaking. Peak solar energy outputs roughly match the needs for peak power in summer in the southwest United States (U.S.) and in Israel. Summer peak power values are often several times the average base power price, representing an attractive market for solar power.

Three types of concentrating solar-thermal systems have been developed for electricity or process heat production: the parabolic trough, the parabolic dish, and the solar power tower. The parabolic trough plant (for example the LUZ Solar Energy Generating Systems [SEGS] plants in California) is currently the most highly developed commercially. The solar field is modular, but the field layout has been coupled to power blocks up to 80 MW_e; even larger

systems are possible. Parabolic trough systems have also been used on a small scale for low-temperature process heat. The geometry of the parabolic trough limits solar concentrations to about 100 suns and therefore imposes an upper limit on output temperature of about 400°C.

The parabolic dish is the most optically efficient system and is highly modular because each dish must have a receiver at its focus. Temperatures in excess of 1000°C are achievable at solar concentrations of up to 10,000 suns. The most advanced systems utilize a heat engine at the focus of each dish, the electric output being collected for remote applications or distribution to the grid. Economy of scale can only be achieved through savings resulting from the mass production of the components.

The solar power tower utilizes a large field of heliostats focusing on a central receiver and has been tested at the 10-MW_e scale at the Solar One pilot plant in California. Solar concentrations up to 5,000 suns can achieve temperatures up to 1000°C. The central receiver enjoys the economies of scale at least up to the 200-MW_e level. However, the lack of receiver modularity makes it difficult to demonstrate low costs in smaller-sized (<30-MW_e) prototypes.

Matching the solar-electric output to the demand for peak and intermediate power (to maximize revenues) requires either energy storage or supplemental combustion of fossil fuel. Though energy storage was tried in the first SEGS plant, supplemental fuel was found to be more economical and was the method of choice for all subsequent SEGS plants. Availability and environmental issues may limit the utility of fossil fuels for this purpose so that energy storage continues to be a research and development (R&D) objective. Molten-nitrate-salt thermal storage systems are predicted to be practical and economical in meeting these needs in power tower plants. There is, however, no comparable alternative for parabolic trough plants.

A study of 100-MW_e solar electric plants used for peaking indicated that, in general, economic competitiveness requires that capital costs be less than $2000 per kW_e and that either fossil supplement or economical energy storage be used [1]. The best commercial technology currently is at a level of about $3000 per kW_e.

1.2 Reforming and Gasification Background

1.2.1 History

The process of gasification is about 200 years old. By the 1850s, coal or wood gasification was used to produce "town gas," a fuel for lighting and cooking. The basic reaction was the "water-gas" reaction:

$$C + H_2O \rightarrow CO + H_2 \qquad (-131\ \text{kJ/mol}). \qquad (1)$$

This is a highly endothermic reaction carried out at temperatures in the range of 1000°C. Energy for the reaction was provided by combustion to produce a bed of hot coals that were then

exposed to steam. In the presence of an excess of steam, the water-gas shift reaction also takes place:

$$CO + H_2O \rightarrow H_2 + CO_2 \qquad (+41 \text{ kJ/mol}). \qquad (2)$$

This reaction reduced the concentration of poisonous CO in the town gas. In the 20th century, natural gas replaced town gas, and town gas producers became obsolete.

A large industry developed based on the steam reforming of natural gas (largely CH_4):

$$CH_4 + H_2O \rightarrow CO + 3H_2 \qquad (-206 \text{ kJ/mol}) \qquad (3)$$

This endothermic reaction is carried out at 600°-850°C, with energy supplied by combustion of additional natural gas. The syngas is a primary feedstock for the petrochemical industry.

A modern generation of industrial coal gasifiers had their origin in Germany's production of synthetic gasoline during World War II. Syngas is produced in continuous process equipment reacting coal or other carbonaceous fuels with steam and oxygen (O_2). South Africa has an extensive industry for producing synthetic fuels via coal gasification. Many industrial gasification processes were developed in the 1970s and 1980s in response to the high prices of oil and natural gas during that period.

The driving forces for revival of gasification technology were primarily local resource depletion of more convenient fuels, and economics. Interest in gasification as a direct fuel source has persisted during the present period of low fuel prices because of the relative ease of control of undesirable emissions to the atmosphere, in comparison to conventional coal combustion.

The driving forces for use of solar energy in gasification and reforming are long-term considerations of world resource depletion, anticipated high costs of oil and natural gas, and environmental factors. These are discussed in more detail below.

1.2.2 Commercial Production of Syngas

The commercial feedstock of choice for syngas production is natural gas and the most widely used process is steam reforming as discussed briefly above. Steam reforming is conducted usually inside tubes packed with nickel catalyst; each tube is approximately 10 centimeters (cm) in diameter and 10 meters (m) long. The tubes are heated by radiation and convection from burning natural gas or refinery waste fuel gas. Energy recovered from the process provides the process steam, usually in a 3:1 to 5:1 ratio with CH_4. The overall process efficiency, expressed as heat of combustion of syngas product divided by the heat of combustion of input feedstock plus fuel, is in the range of 70 to 75%.

In some cases, natural gas is fed to a partial oxidation process with steam and O_2, and reacted at 1200° to 1300°C to produce syngas. The thermal efficiency is comparable to that of steam reforming. If natural gas is unavailable, syngas is produced by steam reforming of petroleum

distillates or partial oxidation of petroleum residuals. Using this method, the syngas cost is higher than for natural gas feedstock.

In circumstances where petroleum supply is restricted, coal gasification processes are used to produce syngas. In Lurgi gasifiers, used on a large scale in South Africa's synthetic fuel industry, coal is fed to a fixed bed where it is dried, devolatilized, reacted with steam and O_2, and finally burned at 1000° to 1400°C before the ashes are removed through a rotating grate. The hot gases, under pressure, flow up through the descending bed of coal. Other processes, such as the Texaco and Koppers-Totzek, are entrained-bed partial oxidation processes usually removing the ash as molten slag. The thermal efficiency of syngas production via coal gasification is usually between 60% to 70%, not including the energy consumption of O_2 production. Coal gasification is emerging as a process for producing fuel directly for gas turbine power plants. In this case, energy is supplied with air as the oxidizing gas and less effort is required to control the product gas composition.

The gasification of biomass is similar. Biomass is a mixture of cellulose $(C_6H_{10}O_5)_n$, and lignins (typically $CH_{1.23}O_{0.38}$). If heated slowly, dehydration occurs producing a high yield of char (carbon) plus a relatively low yield of combustible gases. If heated rapidly (flash pyrolysis), there is a high yield of volatile sugar derivatives that can undergo further vapor-phase decomposition to CO, H_2, CO_2, CH_4 and C_2H_4. The volatile sugars are evolved at temperatures of about 500°C and their conversion to gas is favored by heating to 800° to 900°C. If the volatiles are quenched, they form tars. There is also a high-temperature reaction path whereby the biomass is immediately converted to these gases, and at temperatures above 1000°C, the hydrocarbons crack with formation of secondary char [2].

Fossilized biomass increases the fixed carbon content at the expense of the volatile content [3,4], going through the classes of fuels called peat ($CH_{1.1}O_{0.8}$), lignite ($CH_{0.8}O_{0.4}$), sub-bituminous coal ($CH_{0.8}O_{0.2}$), and bituminous coal ($CH_{0.8}O_{0.1}$). When subjected to flash pyrolysis, all these materials volatize a substantial fraction of their mass ranging from 0.3 for bituminous coal to 0.7 for peat. Fossilization reduces the chemical reaction rates of char with steam or CO_2, with coal char reacting 30-50 times more slowly than wood char.

Commercial gasifiers of the entrained-bed and fluidized-bed types can accept a wide range of feedstocks, including the solid fuels in addition to heavy residual oils [4]. Steam and O_2 are the reactants for syngas production and steam and air for fuels production. Typical operating temperatures are 1400°C for the entrained-bed Texaco process and 900°C for the fluidized-bed high-temperature Winkler (HTW) process. Fluidized beds are operated below the ash melting point and involve much longer residence time than entrained beds. A number of specialized reactors for biomass gasification have also been under development [3,5]. Economic conditions have not been favorable for any widespread use, however.

1.3 The Potential for Solar Thermochemistry

The market for peaking electric power constitutes a minor fraction of the electricity market, which itself is only a fraction of the total market for energy. Reforming of CH_4 or other fossil fuels to syngas with high-temperature solar thermochemistry could substantially increase the solar share of the total energy market. The driving forces for use of solar energy in reforming and gasification are long-term considerations of world resource depletion, anticipated future high costs of oil and natural gas, environmental factors, and potential energy storage enhancements to solar technology.

While the long-term incentives for solar thermochemistry may be apparent, there is a need to search for near-term applications to establish priorities for R&D activities and to attract support from funding agencies and industry. This study is being carried out within the framework of the IEA/SolarPACES (International Energy Agency/Solar Power and Chemical Energy Systems) Task II (Fuels and Chemicals) to gain a broad view of where there are likely to be near-term applications for the technology. In this report, we summarize the technology status and potential applications, and review other issues that will impact the ability of solar thermochemistry to enter the marketplace.

2. SOLAR REFORMING AND GASIFICATION TECHNOLOGY STATUS

2.1 General Research and Development in Solar Reforming

Most of the research in solar reforming has focused on the concept of a closed loop for storage and transport of solar energy. The concept originated at Kernforschungsanlage (KFA) Juelich in Germany with high temperature energy being supplied by a nuclear reactor [6]. Methane is steam-reformed in a convectively heated tubular reformer using conventional nickel catalyst. The product syngas is cooled, compressed for storage, transported to the point of use, and then reacted in a methanator to release the chemically stored energy and recover the original CH_4:

$$CO + 3H_2 \rightleftarrows CH_4 + H_2O \qquad (+206\ \text{kJ/mol}). \tag{4}$$

The CH_4 is then piped back to the reformer plant.

J. A. Chubb of the U.S. Naval Research Laboratory proposed the CO_2/CH_4 reforming cycle as preferred for solar receivers [7], and together with McCrary et al. [8], operated a solar tubular reformer at the White Sands Solar Furnace. A ruthenium (Ru) catalyst was used. The CO_2 reforming cycle is as follows:

$$CH_4 + CO_2 \rightleftarrows 2CO + 2H_2 \qquad (-247\ \text{kJ/mol}). \tag{5}$$

Solar steam reforming in a closed cycle has been demonstrated by Anikeev et al. [9] using an Ru reforming catalyst and a nickel methanation catalyst. Solar CO_2 reforming in a closed cycle has been demonstrated by Levitan et al. using rhodium (Rh) catalysts [10]. Rhodium has superior stability and freedom from carbon deposition but is, unfortunately, expensive. Better catalysts for these applications are still being investigated. All of the solar reforming research referred to above was performed at energy inputs below 10 kW, and with fixed catalyst beds retained by metal walls mounted directly in solar receivers.

In an attempt to develop more economical, compact receivers for methane reforming, experiments on a laboratory scale were started at Sandia National Laboratories (SNL), at Deutsche Forschungsanstalt für Luft-und Raumfahrt (DLR), and at the Weizmann Institute of Science (WIS) with windowed receiver-reactors where the catalyst is heated directly by a concentrated solar beam. The most advanced project of this type is described below (CAESAR). Efforts to develop windowed receiver-reactors are continuing at DLR, at WIS, and at the Institute of Catalysis, Novosibirsk.

Another reforming approach, noncatalytic gas-phase reforming at elevated temperatures (above 1000°C), was explored by Hunt et al. [11] in a nonsolar experiment. This technology requires larger volumes and higher temperatures than catalyzed reforming but may find applications.

2.2 Solar Reforming Concepts

The high temperatures required for solar reforming effectively limit the concentrator choices to dishes and central receivers. The dish technology is modular and is well suited to distributed applications such as the destruction of toxic wastes. On the other hand, bulk energy production, whether in closed-loop or open-loop configuration, probably must be carried out on a large scale to compete with fossil fuels and probably requires the tower (central receiver) technology.

Another set of issues relates to the choice of steam or CO_2 for reforming. There are advantages and disadvantages for each option with a clear choice only for certain open-cycle applications. For example, if methanol were the desired end-product, the amount of steam or CO_2 used would give an optimal CO/H_2 ratio in the syngas. If H_2 were the desired product, steam reforming is the choice. For closed-cycle systems, the choice is currently unresolved. Several basic solar reformer concepts have been investigated. These can be classified as the indirectly heated reformer, the tubular reformer-receiver, and the windowed or volumetric reformer-receiver.

The indirectly heated reformer consists of a tube bundle containing catalyst within the tubes through which the process gas is circulated, and heated by a secondary fluid that gets its thermal energy from a solar receiver. The nuclear-heated reformer of Reference 6 was of this type, heated by circulating helium. Other heating agents that have been considered are air and condensing sodium vapor. The indirectly-heated steam reformer has potential advantages of utilizing commercially proven tubes and catalyst, and it can be equipped with thermal storage or auxiliary fossil firing to give extended or 24-hour operation. This mode of operation is desirable to reduce capital costs and provide a uniform product. The process pressure can be optimized independent of the solar receiver pressure. On the other hand, the indirectly heated system has more equipment, and the secondary fluid introduces additional pumping and temperature losses.

The tubular reformer/receiver incorporates the catalyst-bearing tubes directly into the solar furnace where they are heated by solar radiation. While this concept eliminates the costs and energy losses associated with the secondary heat transport loop, a larger and more costly solar receiver is required. A limited amount of heat storage is associated with the receiver, sufficient to damp the effect of solar transients. Auxiliary fossil-fuel or electrical heating can be used to extend the heating time, and there is freedom in selecting the optimal process pressure.

The windowed or volumetric reformer/receiver places the reforming catalyst in a position where it is heated directly by the solar beam, making very high volumetric reaction rates possible. As a result, the receiver is quite compact and potentially inexpensive. However, this technology is far from commercial practice. It requires good matching of flow rate with solar flux; it requires the development of reliable windows (which may limit operating pressure); and it does not lend itself to energy storage or nonsolar operation. Nevertheless, prospects for low capital costs and a good match to dish concentrators make this concept attractive. The individual receiver cells are limited in capacity by the window area, but large modular arrays are feasible for solar towers.

2.3 Solar Reforming Experiments

2.3.1 CAESAR: Solar Carbon Dioxide Reforming of Methane

The concept of solar-driven reforming reactions in a commercial-scale volumetric receiver/reactor on a parabolic dish concentrator has been successfully demonstrated in the Catalytically Enhanced Solar Absorption Receiver (CAESAR) "proof-of-concept" test [12,13]. Designed to produce approximately 100 kW, it used an integrated direct catalytic absorption receiver (DCAR) reactor that is uniquely suited to the high-temperature/high-flux environments provided by point-focus concentrators.

The CAESAR project was a joint undertaking involving SNL and DLR. It was initiated in 1987, under Task V of the International Energy Agency's Small Solar Power Systems (IEA/SSPS) project, and completed in 1990. The objectives of the CAESAR project were to demonstrate the solar DCAR concept using a commercial-scale receiver/reactor on a parabolic dish, and to develop numerical simulation models capable of predicting the global performance of the receiver/reactor unit and the thermal, chemical, and mechanical performance of the absorber. The focus, therefore, was on obtaining global and absorber performance data over a range of steady-state and transient operating conditions (e.g., cloud transients) and comparing these results with model predictions.

In DCAR reactors, concentrated solar radiation is volumetrically absorbed and chemically converted throughout the catalyst-coated porous absorber matrix. The solar energy is absorbed directly by the catalyst particles, causing the reaction sites to have the highest temperatures in the system. Heterogeneous reforming reactions with reactant gases flowing through the matrix, therefore, are expected to be kinetically limited rather than heat-transfer limited as in conventional tubular reactors. High solar flux capability leads to compact, low-mass receivers with small apertures, reduced heat losses, and fast response. Concurrent, rather than countercurrent, solar radiation and gas flow reduces absorber surface temperatures and reradiation losses.

Complimenting the tests, simulation models were developed. A one-dimensional, steady-state model of the catalyzed porous volumetric absorber provided guidance in designing the CAESAR absorber. An improved version of this model, together with a coupled one-dimensional, steady-state model of the complete receiver, were used to aid in interpreting and understanding the test results.

Two foam disk absorbers (reticulated, 85% porous ceramic [92% alpha alumina and 8% mullite], 64-cm diameter by 5 cm thick) were tested. One had a radially uniform structure (allowing uniform flow radially), while the other had higher permeability in the center to allow a non-uniform flow that more closely matched the incident solar flux. Both absorbers contained axial variations in pore size designed to optimize absorption and reaction properties. They were loaded with Rh catalyst to approximately 0.2% by weight.

The assembled absorber was mounted behind a quartz window in a cylindrical section of the CAESAR receiver that carried the feed-gases (reactants CO_2 and CH_4) to the exposed absorber surface. These gases then flowed back through the absorber where they were heated and reacted, producing H_2, CO, and H_2O. The product gases exited the receiver through a ceramic-lined exhaust duct. The reactor was installed in the receiver test bed of the parabolic dish test facility (PAN) at the DLR research center in Lampoldshausen, Germany. The 17-m dish can produce up to 150 kW solar power with fluxes up to 2 MW/m^2. A photograph of the CAESAR unit in operation is shown in Figure 1, while Figure 2 shows a schematic of the receiver.

The system was operated during both steady-state and solar transient (cloud passage) conditions. The total solar power absorbed reached values up to 97 kW and the maximum CH_4 conversion was 70%. Receiver thermal efficiencies ranged up to 85% and chemical efficiencies peaked at 54%. Global model predictions such as reactor efficiencies and CH_4 conversion compared well with test data. For example, model predictions of 71.9%, 48.2%, and 46.5% for thermal efficiency, chemical efficiency, and CH_4 conversion, respectively, for one of the CAESAR tests, compared favorably with the corresponding test values of 79.3%, 50.7%, and 45.9%.

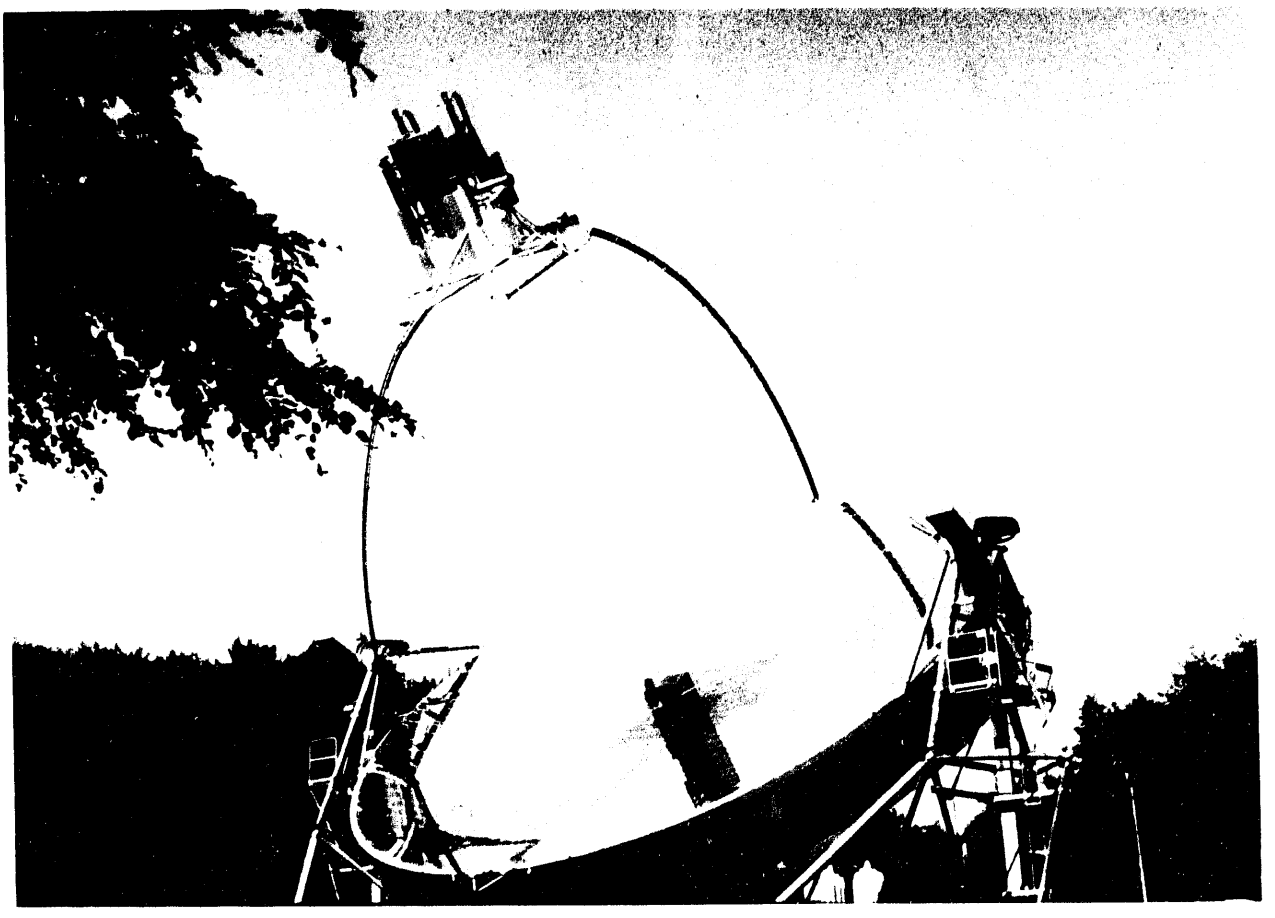

Figure 1. CAESAR unit in operation.

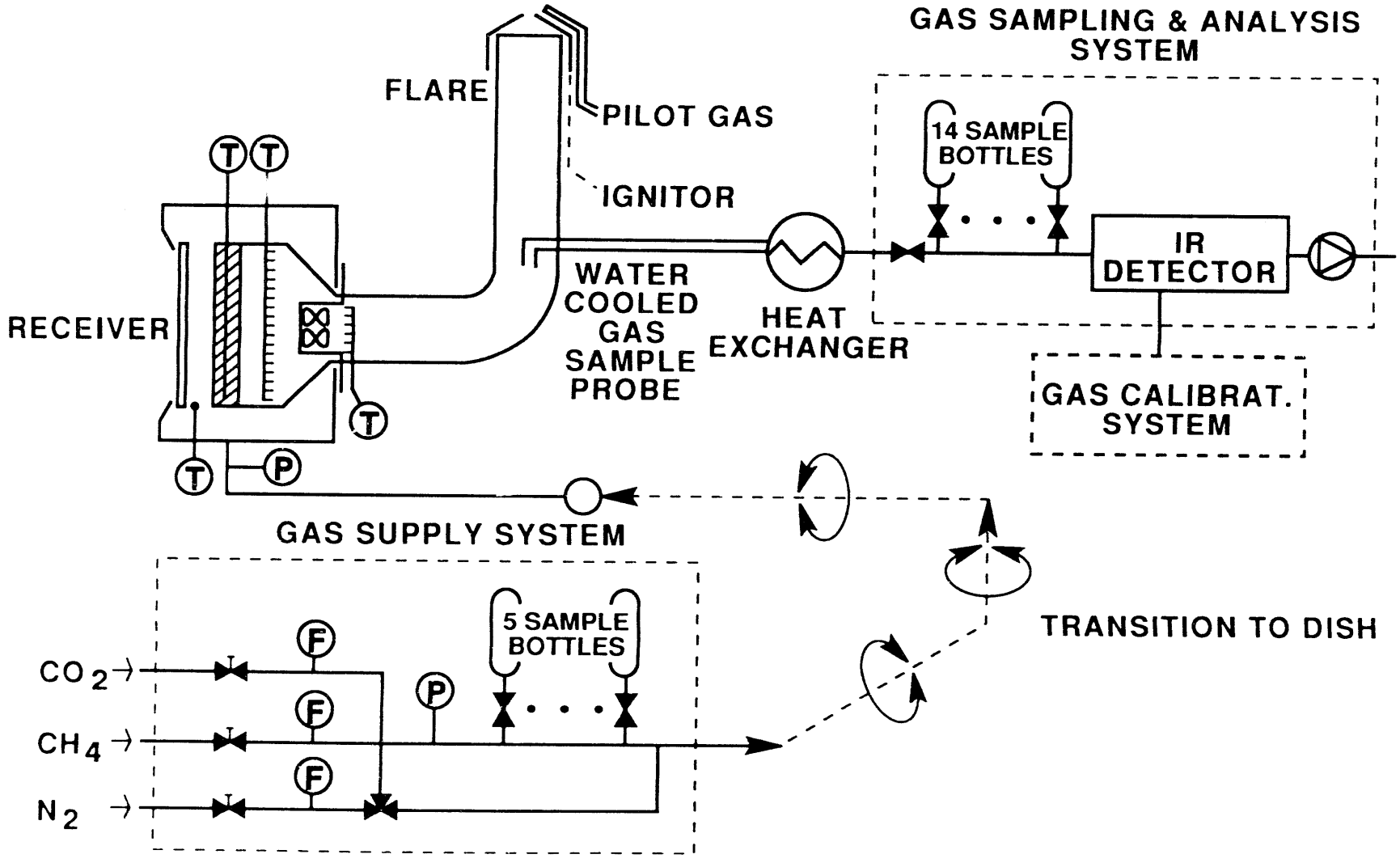

Figure 2. Schematic diagram of the CAESAR reformer/receiver.

The CAESAR tests successfully demonstrated the concept of solar reforming of CH_4 with CO_2 in a commercial-scale direct absorption receiver/reactor on a parabolic dish. The volumetric chemical reactor, consisting of a porous alumina absorber coated with Rh catalyst, operated successfully in promoting the reforming reaction without carbon formation during both steady-state and solar transient conditions. Problems of cracking and degradation of the porous matrix, non-uniform dispersion of the Rh through the absorber, and catalyst deactivation due to sintering and possible encapsulation must, however, be resolved to achieve long-term operation and eventual commercialization.

2.3.2 ASTERIX: Solar Steam Reforming of Methane

The Advanced Steam Reforming of Methane in Heat Exchange (ASTERIX) Experiment is a joint Spanish-German project being carried out by Centro de Investigaciones Energé ticas, Medioambientales y Tecnológicas (CIEMAT), and DLR. This solar steam reforming of CH_4 experiment was selected for the investigation of the details and problems associated with matching the process heat demand of an industrial chemical process with solar-generated high-temperature process heat [14] using an indirectly heated reformer. The specific objectives of the ASTERIX experiment are to collect and store an optimum amount of solar energy, to obtain maximum conversion of CH_4, and to produce consistently high-quality synthesis gas.

Within this experiment, the Gas-Cooled Solar Tower (GAST) system at the Plataforma Solar de Almeria is used to produce hot air (up to 0.36 kg/s at 1000°C and 9 bars) to drive a separate steam reformer. This air is then fed back into the GAST cycle. The equilibrium composition of this endothermic high-temperature reaction of natural gas with water depends on temperature, pressure, and steam/methane ratio. The GAST Technology Program developed equipment for a solar gas turbine system and is fully described in Reference 15.

The process diagram for the 100% load case is shown in Figure 3. Heat exchanged is about 170 kW. During nominal operation, the heating medium, air, is taken from the GAST circuit (receiver) at a temperature of 1000°C over a suitable branch line and fed through the electric heater (E-105) to the reforming reactor inlet (V-101). In this solar-only operating mode, air flows through the heater passively without any additional electric heating.

Unavoidable heat losses reduce the air temperature at the reactor inlet to about 980°C. Within the reactor itself, regular heat exchange with the process gas flow cools down the air to approximately 420°C at reactor outlet. In the cooler (E-106) downstream, the air temperature is lowered to 300°C and the air is returned to the GAST circuit.

Methane reforming is initiated at the process gas end of the reformer. A liquid natural gas (LNG) storage tank (T-101) directly provides the reforming unit with natural gas at the required pressure via the LNG evaporator (E-101). Demineralized feedwater is drawn from a feedwater tank by a feed-dosing pump (P-101). Both are heated in preheaters (E-102/E-103), coaxially installed in the reforming reactor, and in a superheater (E-104) to about 500°C. The gas mixture thus formed is then fed into the reaction chamber, i.e., the packed catalyst bed.

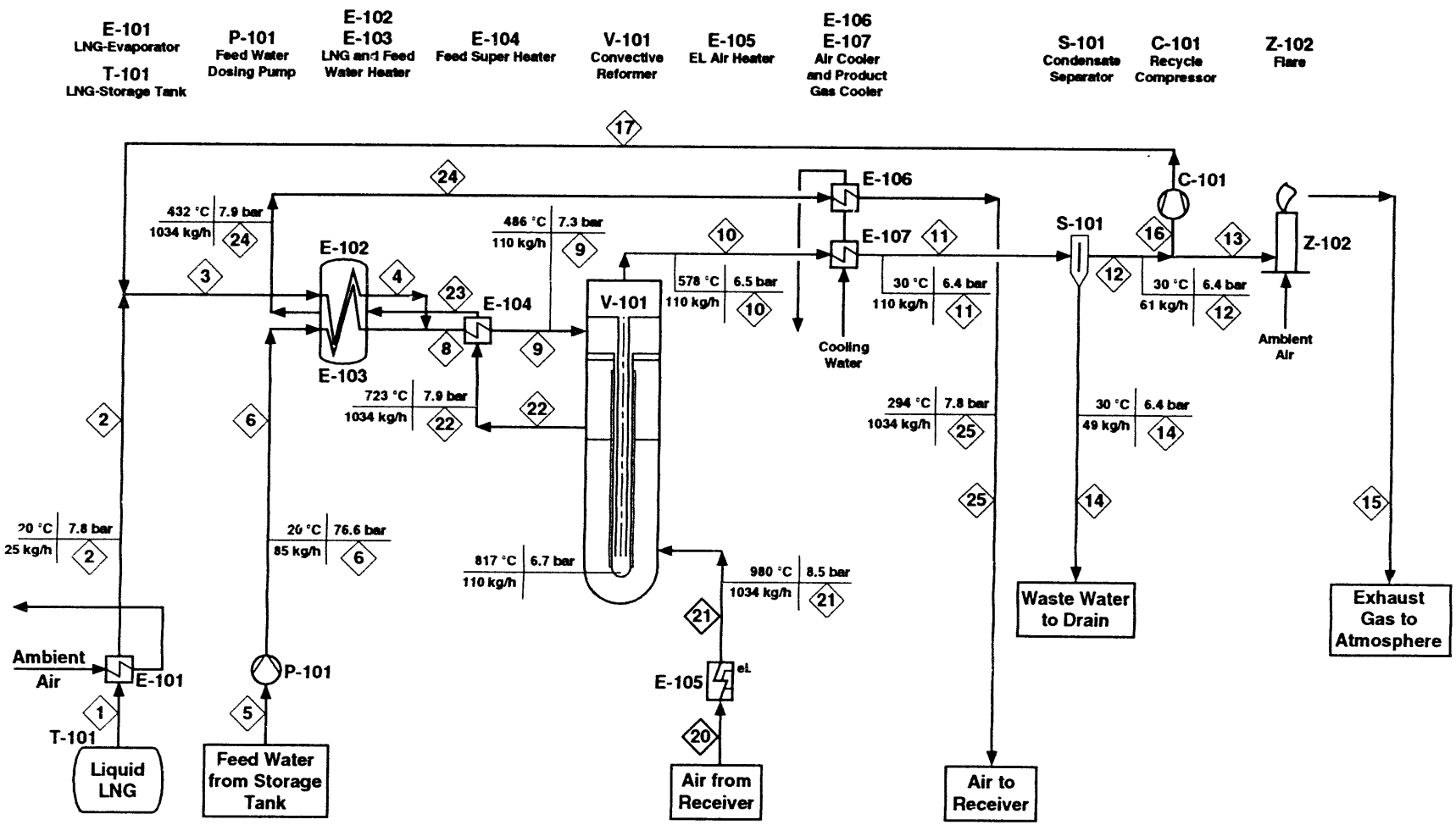

Figure 3. Process flow diagram of ASTERIX (100%-load case).

The process gas mixture is heated by air from 500°C to about 850°C as it passes through the catalyst bed. The endothermic chemical reaction results in the reforming of the CH_4 with part of the water vapor, into H_2 (3 parts) and CO (1 part). By adding water vapor in at least a 3:1 ratio, the deposit of soot on the catalyst surface is minimized or eliminated. The high-hydrogen-content product thus produced is conducted from this part of the catalyst pipe through a helicoidal return pipe, upward past the catalyst bed. The product gas flow is then cooled in cooler E-107 from approximately 600°C down to about 30°C. The composition of the dry synthesis gas is measured by process gas chromatograph. For purposes of this experiment, after extraction of the water content in the form of condensate, the gas passes through the exhaust gas line to the flare burner (Z-102) and is burnt off.

The results of the 50%-load case (m_{air} = 525 kg/h) tests are given in Table 1.

Table 1. Results of the Steady State ASTERIX Tests (m_{air} = 525 kg/hr)

Test no.	1	2	3	4	5
Temperature (°C)	702	750	753	802	803
Pressure (bars)	7.6	7.7	7.7	6.1	7.8
Water-mass flow (kg/h)	26	32	36	35	39
Composition of the synthesis gas					
- H_2O (mol-%)	33.8	30.9	35.5	31.3	31.3
- H_2 (mol-%)	48.6	52.4	44.6	50.7	51.0
- CO (mol-%)	4.6	6.3	9.4	11.3	10.4
- CO_2 (mol-%)	7.4	6.9	7.5	5.4	5.7
- CH_4 (mol-%)	5.6	3.5	3.0	1.3	1.6
Approach (°C)	9	14	3	10	8
CH_4 conversion (%)	68	79	84	93	91

Temperature sensors are installed at six levels along the catalyst bed, making it possible to determine the exact temperature along the length of the reformer tube. The temperature of the air is only measured at the inlet and the outlet of the tube and is adjusted to the process gas tube temperatures between both measuring points. Measured temperature behavior along the length of the tube axis, process gas in the reformer, and air of the 50%-load case are shown in Figure 4.

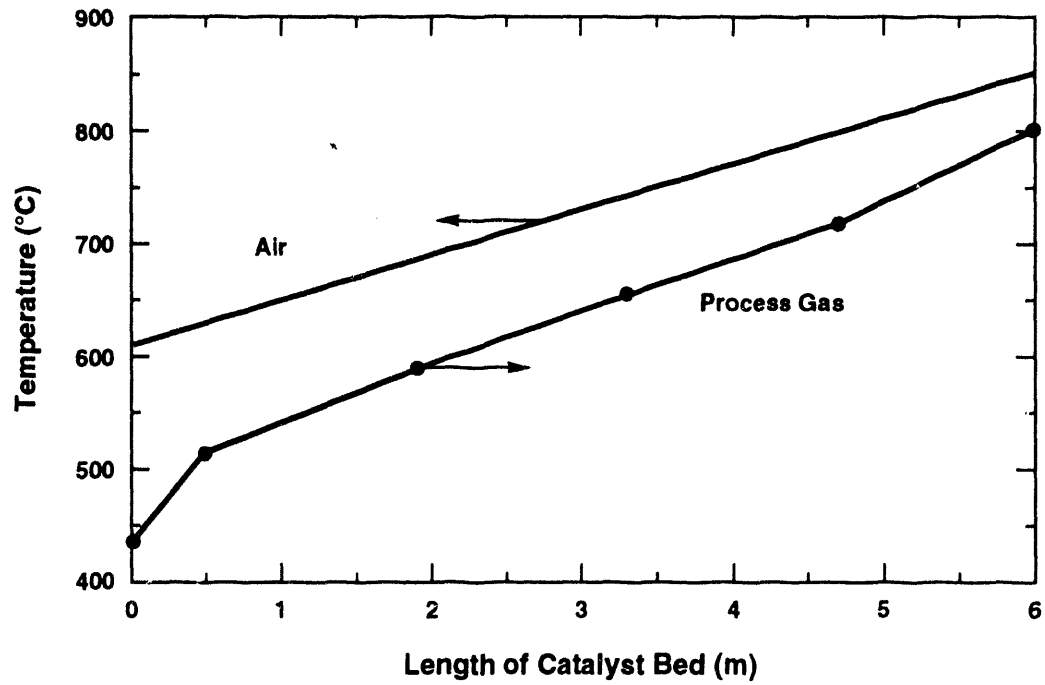

Figure 4. Temperature behavior along the ASTERIX reformer tube.

As already mentioned, one aim of the experiment is to produce a consistently high-quality synthesis gas even under solar transients. The results of a transient test are given in Figure 5. The transients in the air temperature at the outlet of the receiver range from 7° to 19°C/min. The air temperature varies from 60° to 70°C. In this operational mode, the synthesis gas temperature varies about 10°C, while in industrial plants, a 20°C variation is allowable. Changing the steam/CH_4 ratio can reduce the temperature variation if necessary. Detailed descriptions of the results of the ASTERIX experiment are given in References 16 and 17.

2.3.3 The Weizmann Institute Tubular Reformer/Receiver

The WIS operates a solar central receiver for development of high-temperature technology, including the storage and transport of solar energy via CH_4 reforming [18,19]. WIS has designed a facility for testing reformers up to about 480 kW absorbed energy. The facility is designed for either steam or CO_2 reforming, and can accommodate reformers that operate between 1 and 18 bars. The reformer systems are operated in coordination with a matching methanator system that recovers energy from the reverse reaction (Figure 6).

A cavity receiver containing eight vertical reformer tubes (2-inch schedule 80), 4.5 m long (active length), has also been designed. The overall dimensions of this device are about 5 m

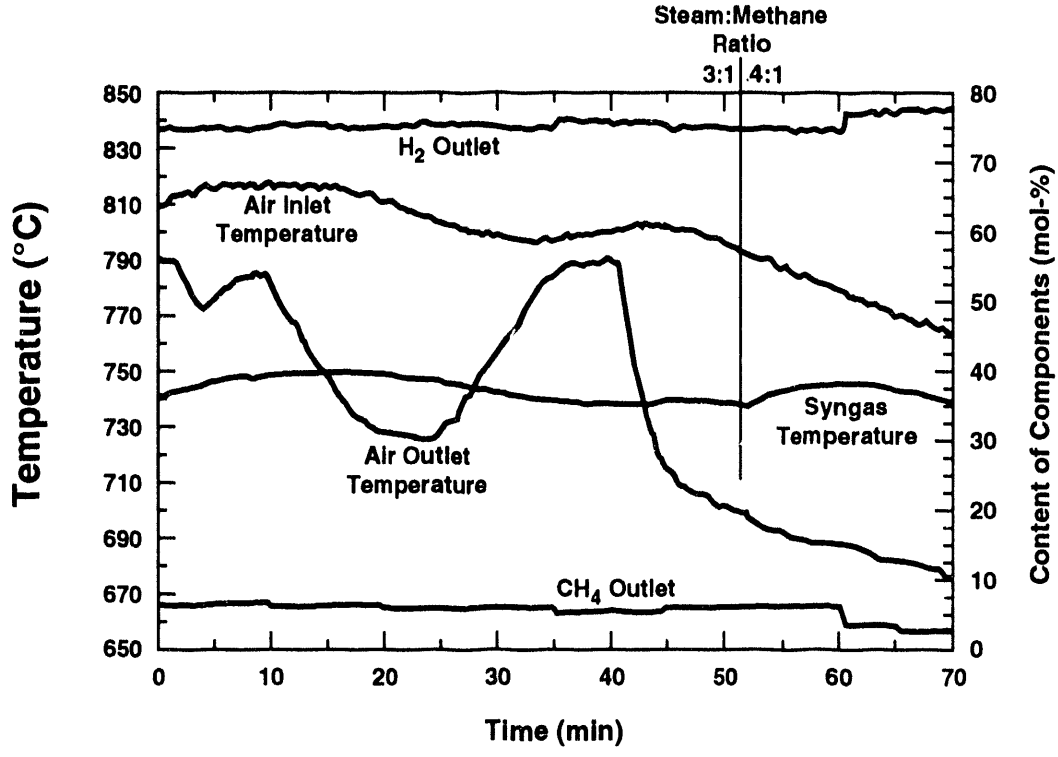

Figure 5. ASTERIX transient test.

high, 4.5 m wide and 3 m deep (Figure 7). The reactor is designed to produce syngas at 800°C. It resembles commercial reformers except that a solar cavity receiver has replaced the conventional gas-fueled radiant furnace.

The methanator portion of the WIS system has been completed and is in the process of initial chemical testing. It uses a nickel hydrosilicate catalyst supplied by the Engelhard Company. Design of the reformer system is also complete, procurement is in progress, and operation is planned to start in 1993.

2.3.4 Soltox

In the Soltox process, a parabolic dish is used to concentrate sunlight through a quartz window into an internally insulated aluminum reactor vessel where it is absorbed on a rhodium (Rh)-coated reticulated ceramic foam absorber. Concentrated organic waste and steam are mixed and flow through the hot (>1000°C) catalyst bed, where they react completely in fractions of a second to produce H_2, CO, CO_2, and halogen acids (which are easily neutralized to simple salts). The extremely good heat and mass transfer within the reactor result in a compact, highly efficient system.

When a vaporized organic waste is mixed with steam and passed through the reactor, highly specific, irreversible, endothermic reforming reactions take place on the catalyst-coated surface

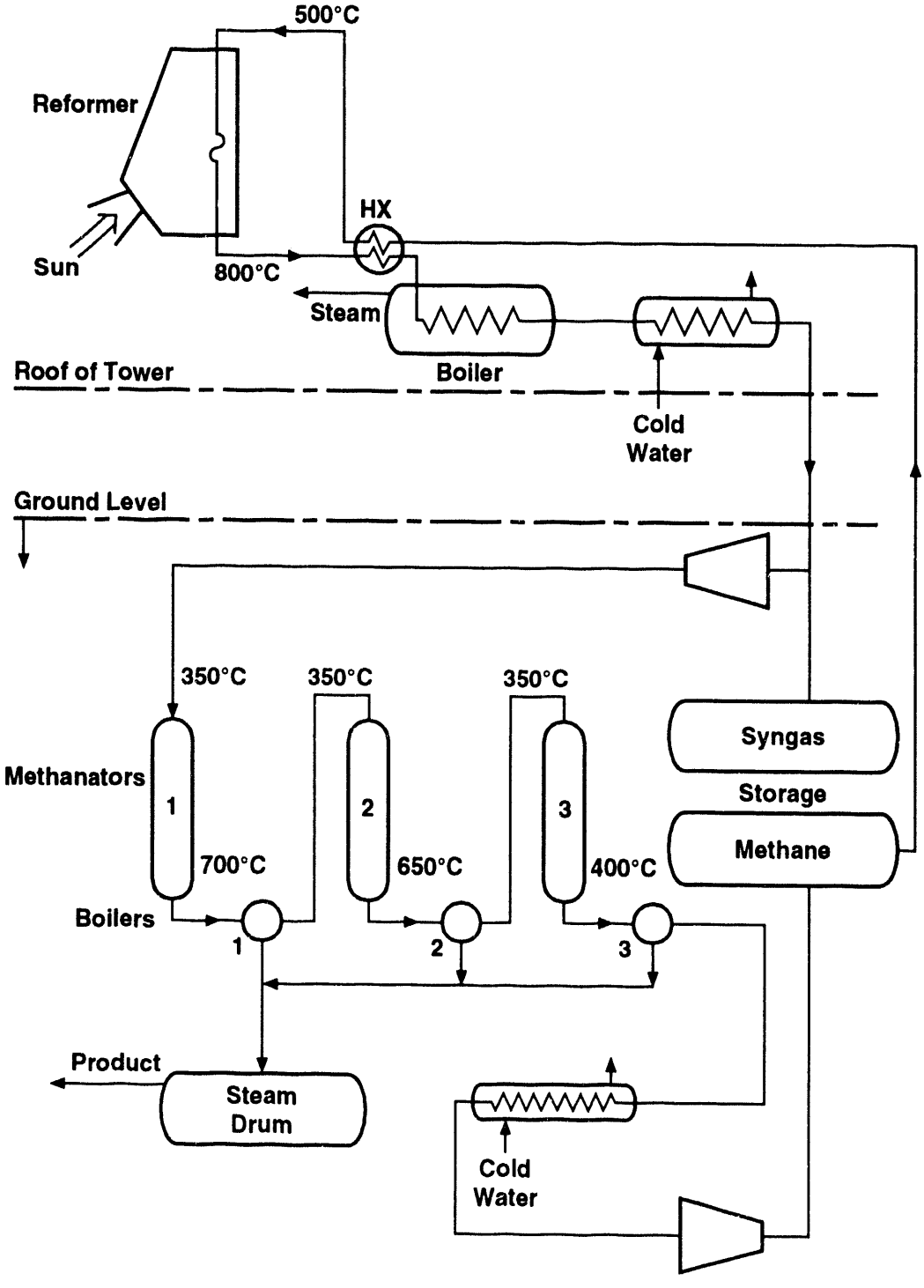

Figure 6. The Weizmann Institute solar chemical pilot plant.

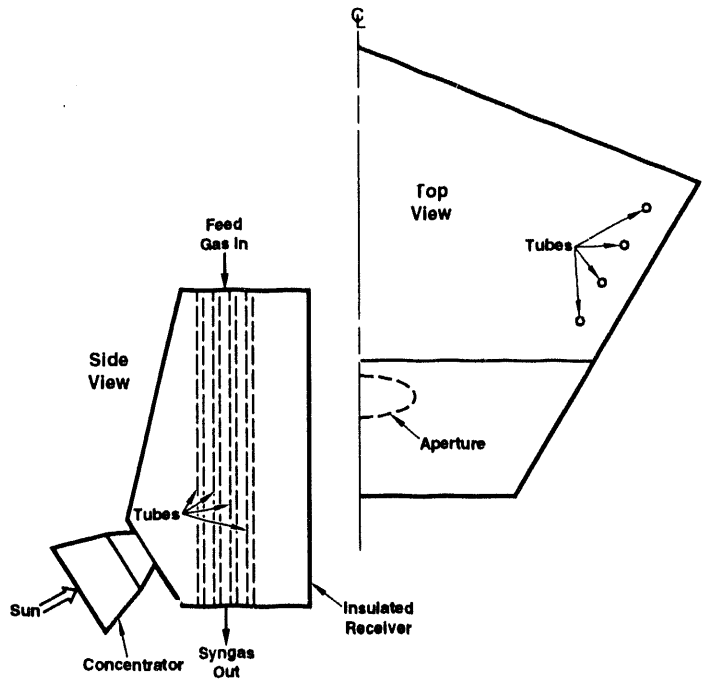

Figure 7. The Weizmann Institute 480-kW tubular reformer/receiver.

of the radiantly heated absorber to quantitatively destroy the waste. For example, for trichlorethylene (TCE):

$$HCCl{=}CCl_2 + 2H_2O \rightarrow H_2 + 2CO + 3HCl\,. \tag{6}$$

Because reforming is not a combustion process, neither fuel, nor air, nor oxygen need be supplied to the reactor. Thus, in marked contrast to incineration, destruction of organic wastes by solar-driven, high-temperature, catalytic reforming produces neither NO_X nor products of incomplete combustion (PICs). In addition, variable absorber thickness and adjustable gas flow rates mean that residence times within the absorber, and thus reaction times and destruction efficiency, can be controlled.

Destruction of toxic organic chemicals by thermal/catalytic steam reforming has been investigated in bench-scale and pilot-scale experiments. Catalyst properties and the rates of reaction of model compounds have been determined by laboratory experiments conducted at the University of Houston [20,21], while reaction products and byproducts have been determined by on-line mass spectrometric analysis of effluents generated by microreactor reforming experiments conducted at the National Renewable Energy Laboratory (NREL) [22]. These experiments have consistently demonstrated that no measurable amounts of unwanted byproducts are produced by the destruction of chlorinated and nonchlorinated hydrocarbons by using Rh-catalyzed steam reforming, and that the destruction yields only the expected principal reaction

products (H_2, CO, CO_2, and hydrochloric acid). Experiments in oxidative and pyrolysis environments, on the other hand, have shown a multitude of PICs, including multi-ring structures. Further, kinetic and thermodynamic calculations [23-26] have shown that byproduct formation in a solar-driven DCAR reactor should be minimal (below regulatory concern). Also, engineering scale experiments have demonstrated TCE destruction with high efficiency at rates (during short-duration experiments) of over 20 kg/hr. It is anticipated, therefore, that waste destruction factors greater than 99.9999% are obtainable with the solar technology.

2.4 Solar Gasification Technology

A conceptual solar gasification process is illustrated in Figure 8. In this case, biomass is heated rapidly in a solar furnace to achieve flash pyrolysis at temperatures of about 900°C. Some steam is added to the pyrolyzer to increase the gas yield relative to char. The char, constituting about 10% to 20% of the biomass by weight, is steam gasified with external heating at temperatures of 900° to 1000°C; all of the volatile hydrocarbons are then steam reformed in a solar reformer. Steam for the process is generated from heat recovered from the product gas. The composition of the syngas is adjusted to the users' needs utilizing conventional operations involving the water-gas shift reaction and CO_2 stripping.

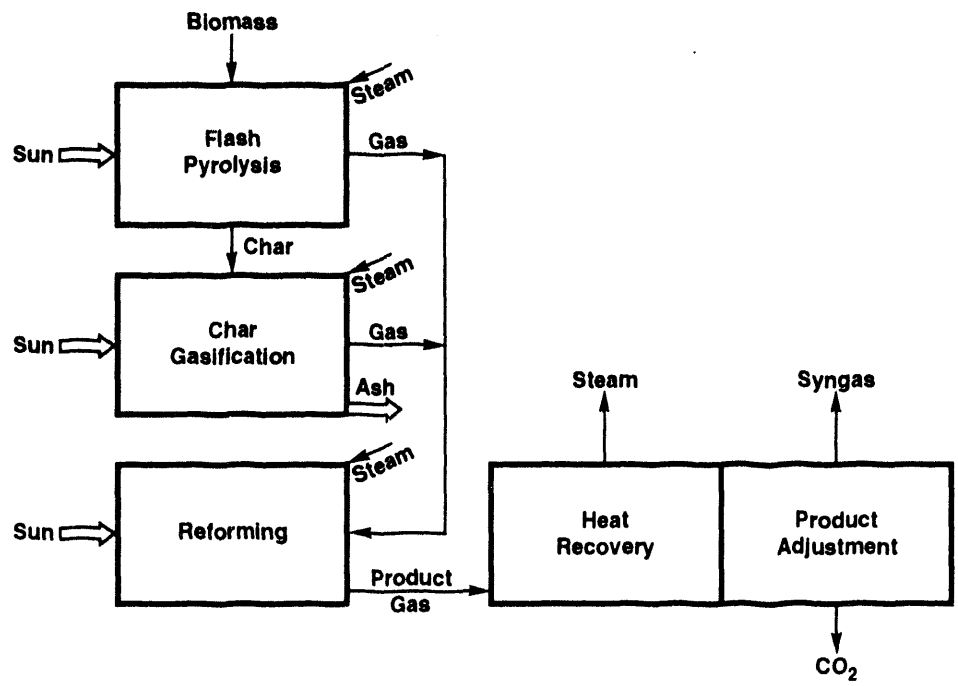

Figure 8. Conceptual solar gasification process.

There have been a number of experiments covering gasification of small quantities of biomass, coal, oil-shale, and residual oil with external heat supplied by the sun. These experiments

included cellulose gasification [27] and oil-shale gasification [28] with carbon recovery in the gas product approaching 100% at temperatures of 950°C and short residence times. These experiments confirm the applicability of the flash pyrolysis approach but do not as yet provide data useful for design and scale-up of a solar gasification process.

2.4.1 DLR Gasification Studies

Coal gasification is a well-known technology used world-wide for the production of gas for heating and synthesis. The use of solar energy as the heat carrier for allothermal coal gasification would have the following advantages: saving available coal reserves and reducing coal-specific emissions, particularly CO_2. The Deutsche Montan Technologie für Rohstuff-Energie-Umwelt (DMT) designed an allothermal coal gasification plant [29] that can be directly connected to the GAST system, described in Section 2.3.2.

The GAST circuit and the MAN Bergbau-Forschung Gaserzeugung (MBG) gasifier [30] are the main components in an allothermal process for pressurized coal gasification. A gasification reactor where coal is allothermally gasified in a fluidized bed is shown in Figure 9. In this process, finely powdered coal is fed by a specially designed injection system. The oxidizing and fluidizing agent is superheated steam. The heat required for the endothermic gasification reaction is introduced by means of a tubular heat exchanger assembly immersed in the fluidized bed.

In connection with the GAST system, the technical feasibility of a solar power tower and MBG gasifier integration can be demonstrated in the form of a small-scale pilot plant. Figure 10 shows the process flow diagram for the utilization of solar energy in the MBG process. A 40-kg/hr coal processing rate can be attained in the gasification process with the GAST circuit parameters. With 1000°C air at 9 bars at the receiver outlet, coal is gasified at a temperature of 859°C with an 87% conversion rate. The reactor volume required for this is 0.42 m^3. Using a computer code, the DMT has simulated the plant conditions. The plant can operate on solar energy only or, with auxiliary fuel, 24 hours per day. In the solar-only case, coal savings are approximately 49%, while in the 24-hour operation mode, they are 26%.

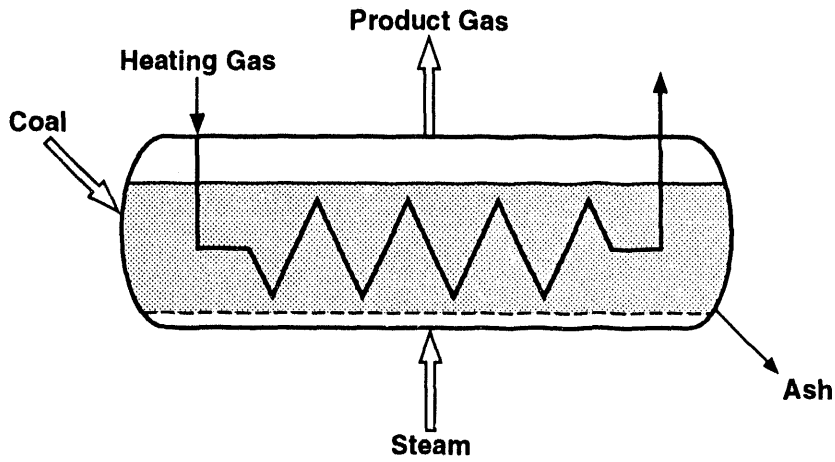

Figure 9. Design concept of an allothermal gasifier.

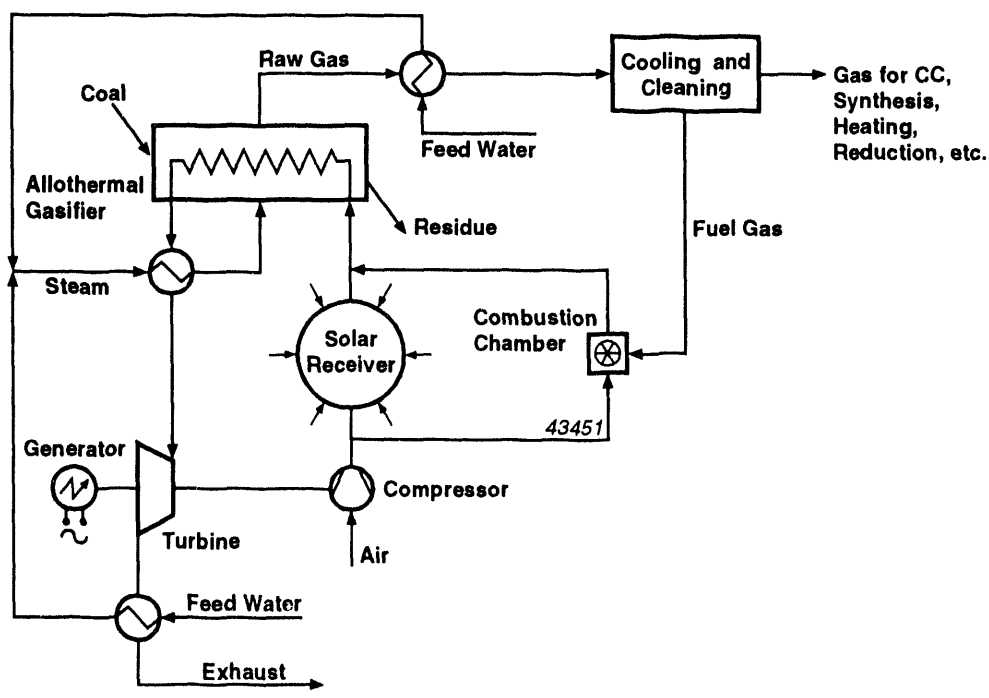

Figure 10. Utilization of solar energy in the MBG process.

3. POTENTIAL APPLICATIONS

3.1 Closed Loop Reforming/Methanation

3.1.1 System Description

There are two general markets for the closed-cycle energy storage systems, one providing energy storage for electric power generation, and the other for storage and transport of energy for process heat or cogeneration of electric power and steam.

A solar-chemical storage system would logically supply energy to a solar power plant using a steam turbine (Figure 11). This energy would be utilized at times of peak power demand or as needed to assist plant operation (start-ups, cloud transients). Although the methanator block could in principle be the only source of energy for the turbine, this arrangement is not preferred because steam directly from the solar plant is cheaper when available. This type of plant would need to compete directly with molten-salt power towers with sensible heat storage. The storage cycle efficiency is expected to be in the range of 60% to 75%.

The methanator consists of several chemical reactors in series with interstage steam generation and superheat. The methanator stages deliver heat over a temperature range of 350° to 700°C, adequate to supply steam at 100 bars and 550°C for a modern steam cycle. The catalyst is maintained at temperatures of about 300°C during standby and can reach full operation in minutes after syngas feed is started.

The operating/design strategy for a closed-cycle solar reforming plant in Israel or the southwest U.S. might be as follows. The solar field might be about 20% larger than required for the steam generator. The solar reformer would be sized to accept the entire output of the solar field. The syngas storage would be sized to supply about eight hours of steam production at full load. In summer, peak demands for power occur on weekday afternoons. The steam-boiler would be operated to satisfy the peak demands. Surplus solar energy would be diverted to charge the chemical storage, which might also be charged on weekends when demand for power is low. The stored energy would be used for start-up of the turbine plant, smoothing the response to solar transients during peak demand periods, and for late weekday afternoons when the steam-boiler cannot fully power the turbine. In winter, peak demands occur on weekday early evenings. Priority would be given to energy storage to satisfy these peaks, with surplus energy going to the steam-boiler-turbine plant when surplus is available. This strategy would supply about 2500 full-power hours per year with good service during peak demand periods.

The closed-loop option based on nuclear energy was studied by KFA Juelich for many years. Reference 31 is a feasibility study of a nuclear-driven chemical heat pipe (CHP) serving the region from Frankfurt to Köln, a distance of 200 kilometers (km). The CHP cost for supplying steam for cogeneration at distributed sites was comparable to the cost of distributed steam boilers burning (expensive) German hard coal. The piping cost was about 5% of the facility cost. These schemes have since been abandoned because of popular opposition to nuclear power.

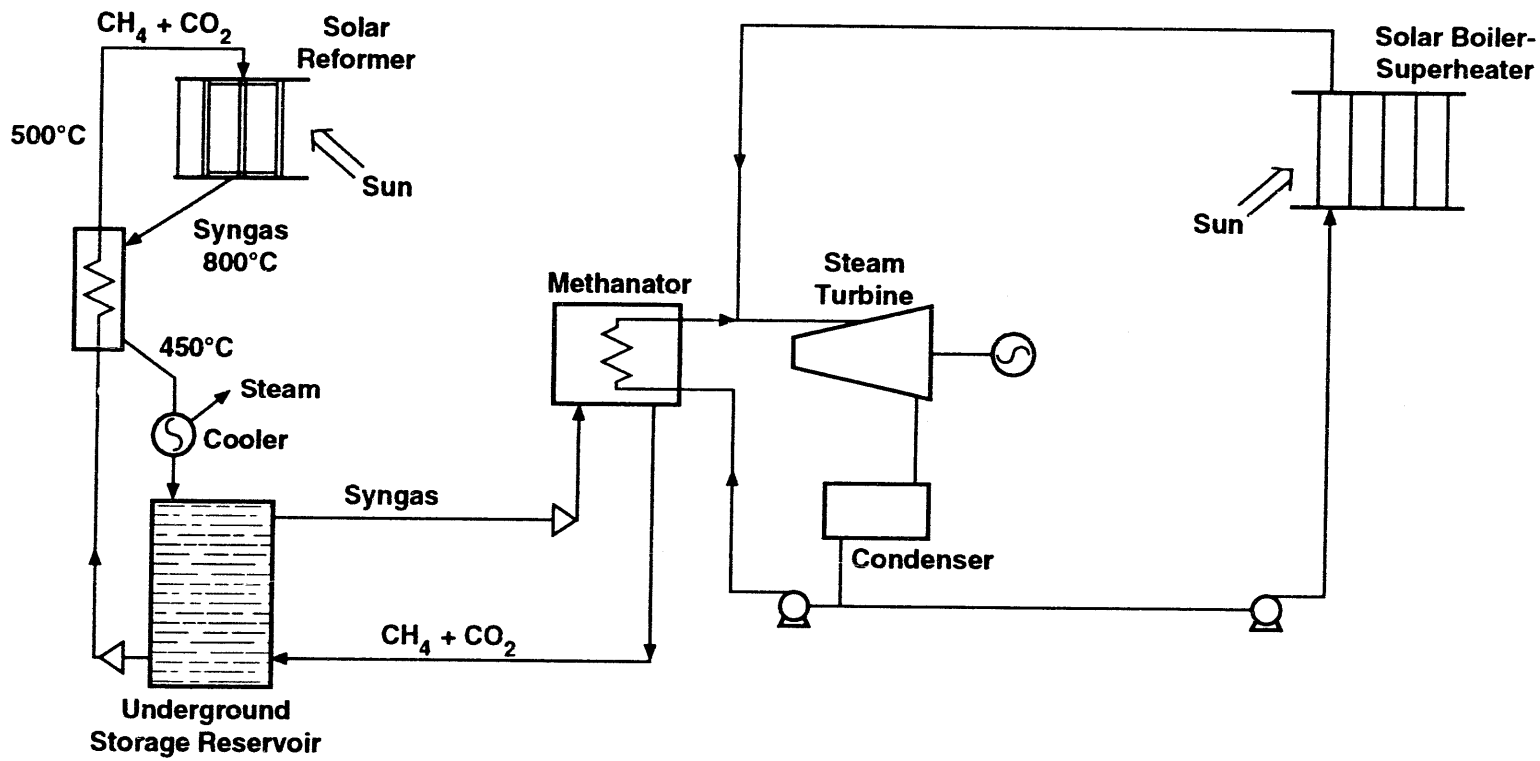

Figure 11. Chemical storage system combined with a solar power plant.

Reference 32 is a 1983 preliminary study of a solar CHP in southern Israel with piping of about 200 km serving industrial steam markets. The piping costs were about 10% of the project costs. Steam costs were projected to be comparable to the costs of steam from boilers using fuel oil at $180/ton ($4.70/MMBtu) that escalated at 4.5%/year above inflation. Current fuel costs are much lower than those projected in 1983.

3.1.2 Syngas Storage

The quantity of syngas stored could be sufficient to satisfy daily, weekly, or seasonal demands for power, depending on local requirements, conditions, and fuel and processing costs. For short-term (daily) storage, aboveground tank systems might be adequate.

For longer term storage (up to seasonal), both the CO_2/CH_4 mixture and reformer product (syngas) could be stored in geologic systems, such as a depleted natural gas reservoir or an artificial cavern. Such technology has been developed by the gas industry. In some types of geology, the lighter reformer product (syngas) might be stored on top of the CO_2/CH_4 mixture in the same reservoir. In the U.S., there are currently about 300 underground natural gas storage projects. The experience of these systems is applicable to storage of syngas from solar plants.

About 97% of these current projects involve the use of depleted reservoirs, aquifers, or reefs. Recoveries range up to 100%, although some loss can be expected. Toxicity hazards from loss of CO, especially from shallower systems, could be a problem. Pressures are formation pressures. Recovery rates are generally low (consistent with original field recovery rates), but could be adequate for planned usage from seasonal storage systems. Costs are generally about one-third those of the cavern systems described below.

The remaining projects involve cavern storage, i.e., utilization of man-made, water-leached caverns in salt formations such as those used for the strategic petroleum reserve. Salt formation permeability is in the sub-microdarcy range, and generally leakage from these systems cannot be measured; recovery is usually 100%. Because the formations are deep, the potential hazards of CO leakage are expected to be minimal. Storage pressure is 2000-3000 psi and recovery rates can be very high. Capital costs are in the range of $2-$3/1000 standard cubic feet ($2-$3/MMBtu natural gas, or $6-$10/MMBtu syngas in a closed-loop system). Other than pumping (pressurization) costs, operation and maintenance (O&M) costs are expected to be minimal.

Salt formations in the U.S. considered practical for this technology are located in the Gulf Coast, the Michigan Basin to Pennsylvania, West Texas, and Arizona (Kingman area and east of Tucson). To be useful, the storage site must be at or near the solar plant or point of use (or perhaps in between). Arizona, West Texas, and perhaps Gulf Coast sites might be feasible.

3.2 Open-Loop Syngas Production

In the long term, the present source of transportation fuels—petroleum—will become more expensive and less abundant. Many studies of alternatives have been conducted. These include

electric vehicles, vehicles fueled by oil-shale or coal liquids, bioethanol or natural gas, and finally vehicles using syngas-derived fuels. The latter include CH_3OH, H_2, and synthetic liquid fuels produced using the Fischer-Tropsch process. According to one scenario that has many adherents, the ultimate energy delivery systems will be based on electricity and H_2. In any event, the potential market for syngas and its derivatives is much larger than the potential market for solar electricity. The competition and market share of these alternatives will be determined by factors of cost, convenience, resource base, safety, and ecology. The syngas-derived fuels have the potential for dominating this future market by virtue of their desirable environmental characteristics, large resource base, and potentially reasonable costs.

While the long-term outlook for syngas-derived fuels is bright, the timing of their large-scale introduction is most uncertain. Currently, CH_3OH and its methyl-tertiary-butyl ether (MTBE) derivative are widely used as additives to gasoline. Hydrogen is used as a fuel for space. Otherwise, the syngas derivatives are basic building blocks in the chemical industry rather than the fuel industry.

Current syngas production is dominated by natural gas feedstocks, with petroleum fractions and coal as alternatives. As discussed earlier, solar energy can be combined with any of these to increase the syngas yield, though not yet at a competitive cost.

Relatively near-term applications for open-loop solar syngas production include the following:

- Natural gas reforming for power plants. A number of European countries have undertaken programs to limit CO_2 emissions. Natural gas imported via pipelines from North Africa can be reformed to syngas or H_2, increasing calorific value by about 25% before combustion in gas turbine or fuel cell power plants. (Fuel costs increase, of course, as long as solar energy costs more than natural gas.)
- Syngas production from municipal, agricultural, and (organic) industrial waste. Industrial societies produce large quantities of wastes for which there are few disposal options that combine good economy, environmental quality, and public acceptance. In sunbelt countries, concentrated waste streams can be gasified to syngas with solar energy at potentially acceptable costs and with essentially no emissions to the atmosphere.
- Soltox-type processing provides an option for environmentally acceptable disposal of a number of toxic organic materials.

Open-loop syngas production can be used for the generation of synthesis gas that is being supplied worldwide for the production of the following basic chemicals [33]: H_2, CH_3OH, NH_3, and oxyalcohols.

3.2.1 Production of Power Plant Fuels

Another possible important use for syngas is electric power production, usually derived from coal gasification to supply fuel for gas turbines. Gas turbine/combined cycle plants are increasingly popular alternatives to coal-fired boiler plants because of their high efficiency, low

capital cost, short construction time, and favorable environmental characteristics. Coal gasifiers can be added to supplement natural gas fuel when dictated by natural gas cost and availability. Coal gasifiers supplying power plant fuel use air as the oxidizer rather than O_2, as there is no need to control the relative amounts of H_2, CO, and hydrocarbons. This fuel syngas is therefore much less expensive than coal-derived chemical feedstock, which is generally produced in a steam/O_2 gasifier with extensive refinement of product composition. Solar syngas may nevertheless be a useful power plant fuel in competition with fossil fuels in fuel cells, or if environmental factors are given greater weight.

3.2.2 Products Derived from Syngas

Methanol is one of the main products of the chemical industry and is used as a feedstock in chemical processes. The majority of CH_3OH (more than 50%) is currently used to produce formaldehyde. In the long term, CH_3OH will probably gain worldwide importance as a transportation fuel.

Hydrocarbons (from natural gas through well gas, refinery gases, LPG, and light naphtha to residue oils) and coal are used as feedstocks for CH_3OH production. Light hydrocarbons up to and including light naphtha are generally catalytically reformed with steam, heavier ones are partially oxidized (Shell process), and coals are coked (coke oven gas) and gasified (pressure gasification, etc.) [33]. At present, CH_3OH is mainly produced by catalytic reactions of CO and/or CO_2 with H_2 according to the reactions:

$$CO + 2H_2 \rightarrow CH_3OH + 91 \text{ kJ/mol} \tag{7}$$

$$CO_2 + 3H_2 \rightarrow CH_3OH + 50 \text{ kJ/mol} . \tag{8}$$

The reactions are exothermic and carried out by volumetric contraction. The maximum amount of methanol will be produced using relatively low temperatures and high pressures. In industrial plants, the pressure range is 50 to 70 bars. Figure 12 shows a CH_3OH plant using solar energy as the heat source.

Ammonia (NH_3) is one of the few chemicals which is still synthesized completely from its basic components, H_2 and nitrogen (N_2). The major application of NH_3 is in the fertilizer industry. To produce NH_3 , the gas coming from the steam reformer is mixed with N_2. To produce a maximum of H_2, CO is first shifted to H_2 and CO_2 with steam according to the water-gas shift reaction (Eq. 2). In the next step, CO is removed by a chemical absorption process, and after final purification and compression to about 200 to 300 bars, the H_2/N_2 mixture reacts according to the equation:

$$3H_2 + N_2 = 2NH_3 + 92 \text{ kJ/mol} . \tag{9}$$

Ammonia is separated from the loop by condensation. It is stored at atmospheric pressure and low temperature. A solar-assisted NH_3 plant is illustrated in Figure 13.

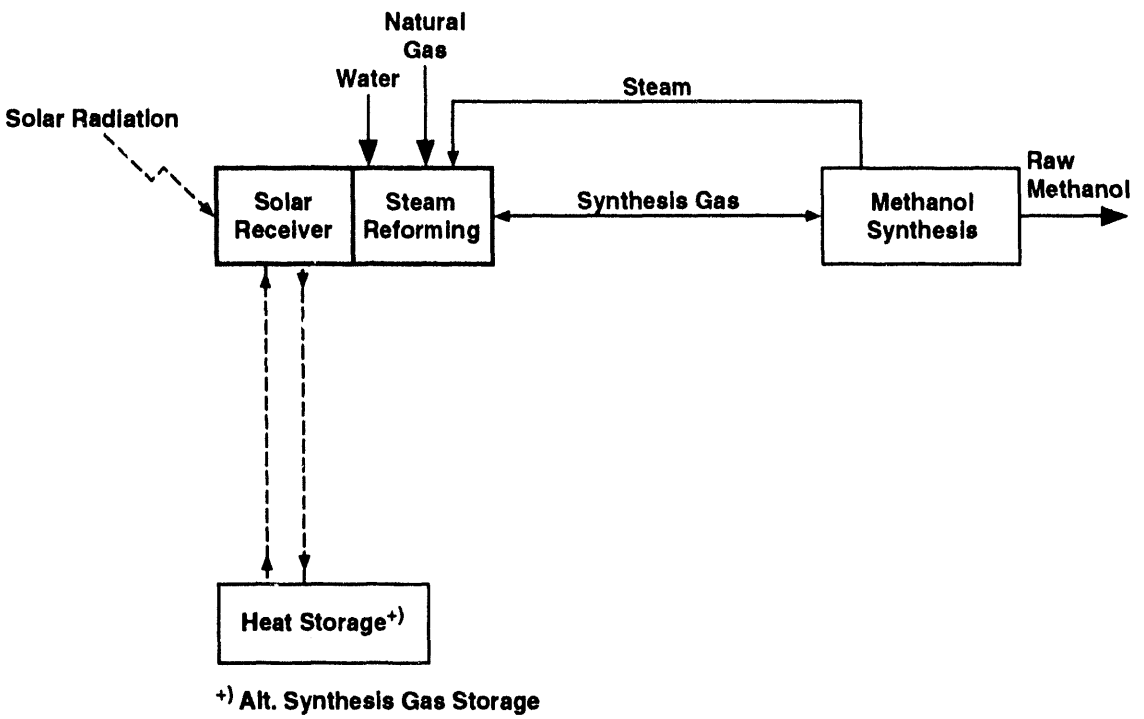

Figure 12. Solar-assisted methanol plant.

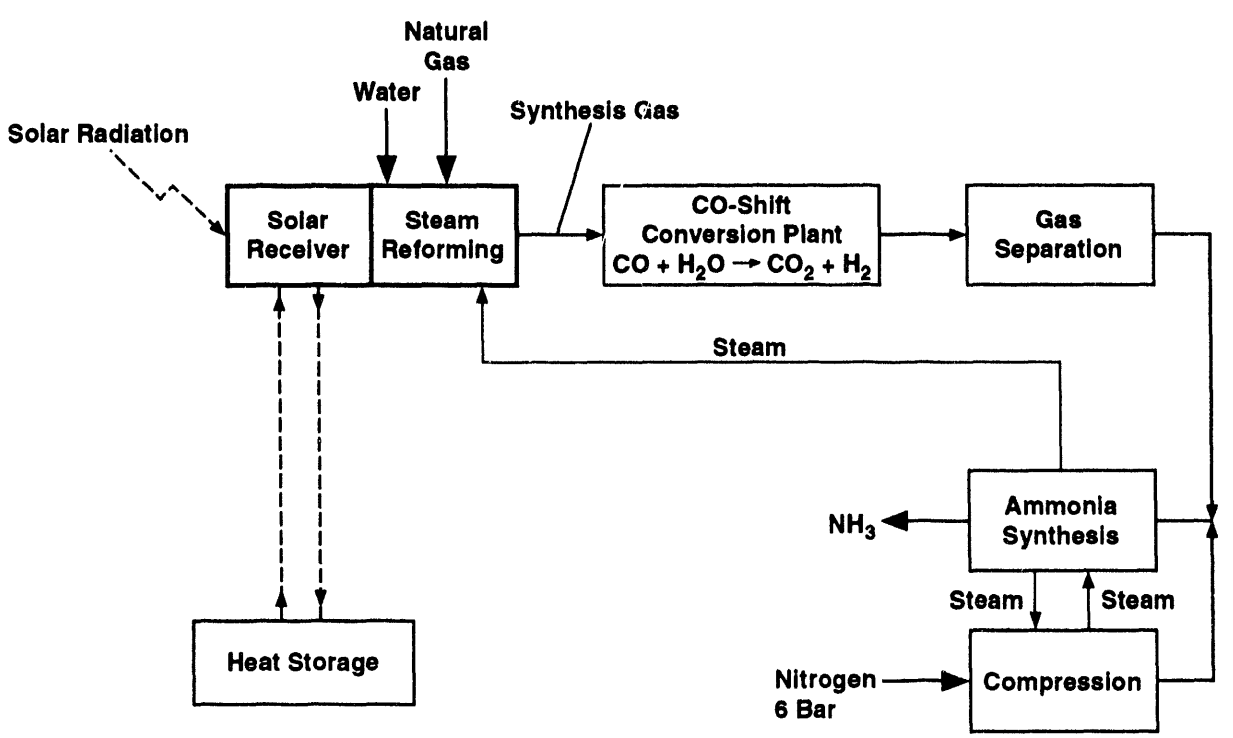

Figure 13. Solar-assisted ammonia plant.

3.3 Hazardous Waste Detoxification

Significant quantities of the hazardous waste generated each year throughout the world are concentrated organic waste. Existing technologies for handling these wastes, including landfilling, deep-well injection, and incineration, suffer from significant limitations. Recent changes in regulations will dramatically change waste management practices for these wastes, including possible banning of landfill disposal and deep-well injection for many materials.

Concentrated organic wastes are presently being destroyed primarily by incineration in rotary kilns, gas-fired chambers, fixed-hearth incinerators, and circulating-bed combustors. Because incineration destroys wastes by burning them in air or O_2, it has a number of significant disadvantages, including auxiliary fuel requirements, formation of NO_x and toxic PICs, materials compatibility problems (with halogens), and large, dilute effluent volumes. Incinerators also usually must be equipped with secondary combustion chambers and stack-gas cleanup devices to achieve mandated destruction and removal efficiencies (DREs). Thus, incineration costs tend to be high.

Potential applications of parabolic dish-mounted systems include the destruction of organics during on-site regeneration of granular-activated carbon (GAC) used in many waste treatment operations, and the destruction of contaminated industrial solvent waste streams and stored inventories of wastes and environmentally hazardous materials such as chlorofluorocarbons (CFCs).

A Soltox system would lend itself to much smaller systems and on-site usage more easily than competing (incineration) systems. A single 11-m-diameter parabolic dish, for example, could destroy as much as 1000 kg/day of chlorinated hydrocarbons at the rates observed in engineering-scale tests (SNL). At projected costs of parabolic dishes, the total capital costs for the solar components (dish, reactor, solar system controls, etc., but not the chemical monitoring and analysis components) of a Soltox system of this size would be in the range of tens of thousands of dollars. This cost range would be very competitive for small, on-site systems. Considerable work remains to be done, however, before these costs can be quantified.

Finally, because the reforming reactions are inherently cleaner than incineration reactions, Soltox systems should be more acceptable to the public than incinerators. Because they are small and inexpensive, they can be sized to a particular waste stream and operated on the site where the waste is generated. This will avoid waste hauling and the costs, liabilities, and public opposition that are associated therewith. Further, because solar energy has a positive image with the public, destruction of wastes in solar reactors may not evoke the same negative public response that the proposed construction and operation of an incinerator evokes.

4. CROSSCUTTING ISSUES

Society's energy use in a free-market system is driven by economic factors. Economics are directly affected by resource availability related to demand, and indirectly affected through taxes and regulations by considerations of national security, environment, and public acceptance. Because of the importance of energy availability to industrial society, governments place many incentives and constraints on energy supply and use. Energy research and development is funded by governments to a large extent because of long-term considerations of these crosscutting issues. In this chapter, we develop some comparisons between solar reforming applications and their conventional alternatives based on economics, but also considering other aspects of decision making.

4.1 Resources and Environment

A concise estimate of the global carbon balance is presented in Table 2 [34,35]. Reserves are identified economically recoverable fuels, resources are identified fuels in the ground that may or may not be economic, and additional resources are inferred from general geologic theory. The table indicates that the amount of fossil fuel available is likely to be much greater than the climate's ability to tolerate atmospheric carbon. On the other hand, if fossil fuel emissions were transferred to the oceans efficiently, the impacts on climate might be much less. Grubler [34] has concluded that energy choices will be dominated by environmental concerns rather than resource limitations, with increased emphasis on efficient use of carbon fuels. He specifically suggests "increased reliance on natural gas . . . especially in combination with active CO_2 recovery (e.g., from steam reforming)" as a transitional option.

Solar reforming and gasification, as described in this report, can make a significant contribution to efficient use of carbon for energy, and the CO_2 recovered from processes (for example in Figure 8) need not be returned directly to the atmosphere. Alternatives are CO_2 injection into geologic formations or the oceans. A comparison of CO_2 emissions from solar reformed fuels and conventional fuels is given in Table 3. The emissions from power production using coal as a gas-turbine fuel are more than twice those using natural gas. Solar fuel processing reduces CO_2 emissions, which can roughly be halved again if CO_2 recovered from solar processing is barred from the atmosphere. Biomass fuels are considered non-CO_2-emitting because the carbon has been initially removed from the atmosphere by plants. CO_2 can be recovered from a solar/biomass process, resulting in a net reduction in global CO_2.

Another set of environmental issues relates to emissions of sulfur, NO_x, and heavy metals from fuel combustion or processing. Solar reforming plants can control sulfur either by removal of hydrogen sulfide from the product stream and its conversion to commercial sulfur, or by addition of limestone to the feed to trap sulfur in the ash. For example, in Israel, local "oil-shale" is over 50% calcium carbonate and can be processed along with other solid feedstocks to augment syngas production while trapping sulfur. Furthermore, reforming does not produce NO_x. Heavy metal behavior may be an issue with some feedstocks (i.e., wastes) and would have to be dealt

Table 2. Global Carbon Balance [34,35]

Total Carbon (gigatons)	Coal	Oil	Gas	Total
Use through 1987	115.0	58.0	24.5	197.5
Use in 1987	2.5	2.4	1.0	5.9
Reserves	392	92	58.5	542.5
Resources	2289.0	622.0	115.0	3026.0
Estimated additional	>3500	>1000	>700	>5200
Preindustrial atmosphere				650
Present atmosphere				760
Present biomass pool				450-600
Present ocean				38,000

Table 3: Carbon Dioxide Emissions from Gas Turbine/Combined Cycle Plants (all 52% cycle efficiency, except integrated coal gasifier 38%)

Fuel/System	CO_2 Emission (kg/kWh)
Integrated coal gasifier	0.22
Solar gasified coal	0.13
Solar gasified coal/CO_2 removal	0.002
Natural gas	0.09
Solar reformed natural gas	0.07
Solar reformed natural gas/CO_2 removal	0.002
Gasified biomass	0.0
Solar gasified biomass/CO_2 removal	-0.05

with, for example, in ash disposal. For most feedstocks, we believe solar reforming would be much cleaner than alternative schemes in regard to these types of emission.

Finally, the best solar resources (Figure 14) are not always located close to the highest concentrations of population [36]. Converting solar energy to transportable fuels (i.e., CH_3OH or H_2) makes it feasible to transport solar energy from the world's deserts to population centers.

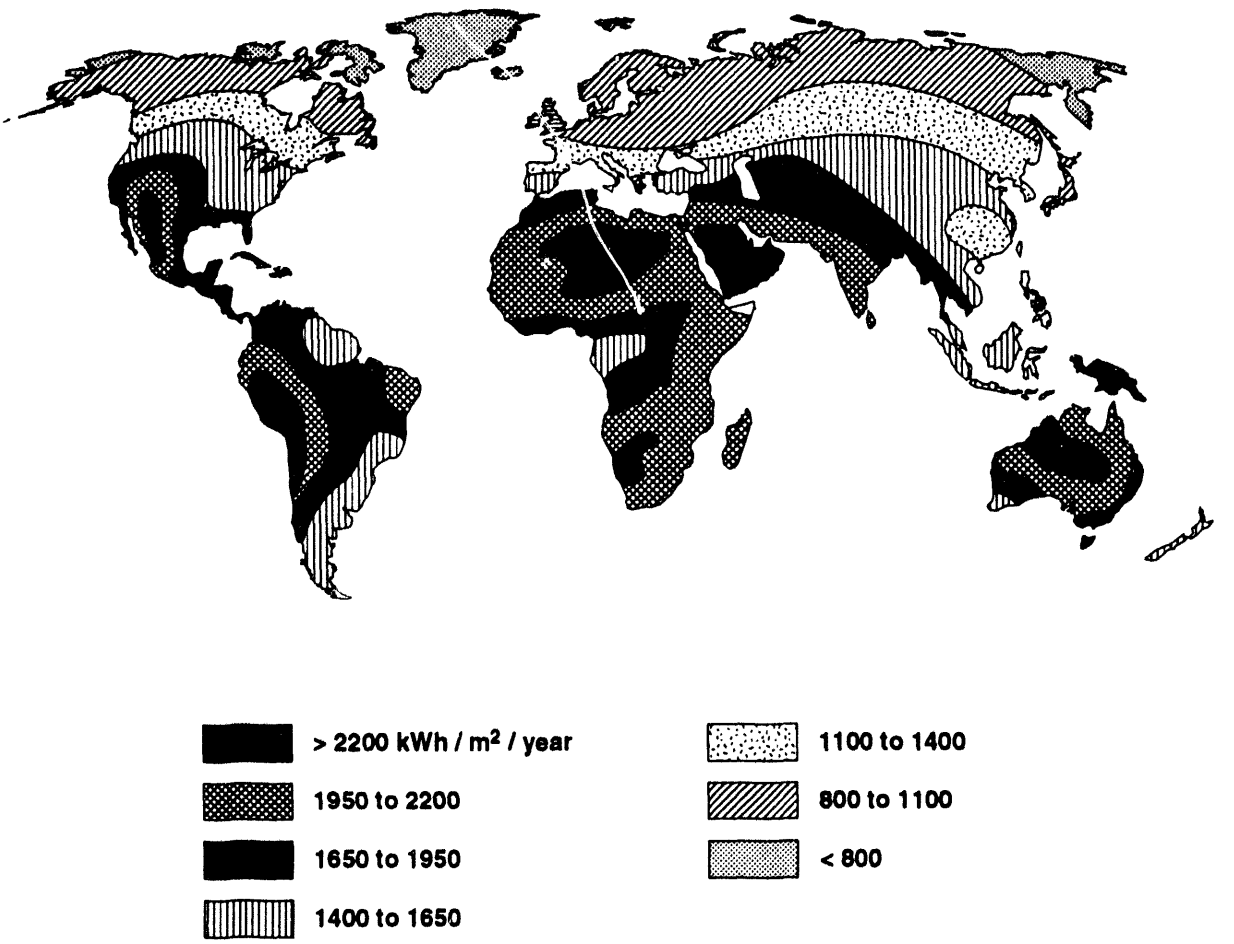

Figure 14. Map of annual solar energy resources [36].

4.2 National Security Issues

The syngas industry was developed in Germany and in South Africa to produce transportation fuels. These industries were based entirely on national security or military considerations. Again, in the 1970s, when there was an oil embargo by some of the Organization of Petroleum Exporting Countries (OPEC) countries, one response was a synfuels development program in the U.S. and Western Europe. In view of the continuing needs for oil imported from the Middle East, there is a continuing danger of oil supply disruptions. Government incentives for syngas production have virtually ceased at present, but development of solar syngas production would at least reduce dependence on imported oil.

Tax incentives are provided in some countries to stimulate domestic production of oil and gas. It could be argued that similar incentives would be justified for investments in renewable energy facilities. Most countries tax transportation fuels heavily, partly to gain revenue, but also to encourage efficient vehicles and reduce fuel imports. Consumer prices for transportation fuels are so far above the base price of these fuels that consumers would see only a small impact of substitution of solar-derived fuels for conventional ones.

4.3 Public Acceptance

Public acceptance issues have significantly affected energy choices. In the case of nuclear energy, public opposition has resulted in a moratorium on new plant construction in many countries, and delayed the solution to waste disposal in most countries. The atmospheric emissions from coal and residual oil combustion are also of concern.

Solar energy, on the other hand, is quite popular. Where it is widely used, e.g., for water heating in Israel, public response has been favorable. Unfortunately, popularity has not been generally translated into incentives favoring solar energy use.

In this paper, solar thermochemical processing for municipal and industrial wastes, and for toxic organic wastes, has been proposed. Most of the conventional alternatives for this processing have not been popular. If research and development projects can demonstrate a high degree of environmental quality with solar processing, then the public is likely to favor this approach.

4.4 Costs

Economic studies at the WIS have indicated that a capital cost of $1600/kW is a reasonable target for a 100-MW_e central receiver-gas turbine plant [1]. The parameters of such a plant are given in Table 4. Solar heat is delivered into the high-temperature solar receiver for $4.80/MMBtu, using a capital recovery factor (fixed charge rate) of 10%. Basically, the same solar configuration might be used to supply high-temperature heat to a solar reforming or gasification plant.

Table 5 displays some conventional schemes for syngas production, based on the data of reference [37]. Where natural gas is available, CH_4 reforming is the preferred process. In Israel, syngas is produced from naphtha reforming, with residual oil fuel. Coal gasification is an old syngas production method often regarded as a prime candidate for replacing high-priced oil and gas. Coal gasification is seen to be relatively unattractive for syngas production as a chemical feedstock, but in the range of interest as a power plant fuel. This is explained by the 10% utility capital recovery factor versus 15% for an industrial fuel processor, and much simpler technology (no O_2 plant, less gas purification). Further details of the cost analysis are given in Reference 38.

Tables 6 through 8 present the economic analysis of solar thermochemical syngas producers using the same solar field and tower described previously (Table 4) for the solar gas turbine plant. Feedstocks considered are natural gas, biomass, and coal. The solar-only plants operate the

Table 4. Gas-Turbine Solar Power Plant Costs

Technical Parameters		
Plant capacity	100 MW_e	
Solar field	400,000 m^2	
Conditions, turbine gas inlet	1300°C, 15 bars	
Beam insolation	2500 $kWh/m^2/yr$ normal to the sun	
Efficiencies		
Utilization of beam energy	58%	
Receiver	85%	
Power cycle, net	50%	
Mechanical availability, other losses	89%	
Overall solar efficiency	22%	
Economic Assumptions		
Capital recovery factor, utility	10%	
Price of petroleum	$ 20/bbl	
Fuel cost, distillate fuel	$ 5/MMBtu	
Capital cost breakdown ($ Millions)		
	Solar-fossil plant 2200 hr/yr solar + 2000 hr/yr fossil	Fossil only plant 4200 hr/yr
Heliostat field ($ 110/m^2)	44	NA
Receiver	21	NA
Tower	6	NA
Heat transport, steam gen.	10	4
Power conversion	35	35
Balance of plant, indirects	44	13
Total	160	52
Calculated costs ($ Millions/yr)		
Capital	16	5.2
O&M	3.2	1.5
Fuel	6.4	13.5
Total	25.6	20.2
Average power cost	$ 0.0610/kWh_e	$ 0.0481/kWh_e
Cost of solar heat into receiver	$ 4.8/MMBtu ($ 0.0164/kWh_t)	NA

Table 5. Conventional Methods of Syngas Production

	Methane Reforming[1]	Naphtha Reforming[1]	Heavy Oil Reforming[1]	Coal Gasification[1]	Power-Plant Gasification[2]
Feedstock	Natural gas	Naphtha	Heavy Oil	Coal	Coal
Fuel	Natural gas	Heavy Oil	Heavy Oil	Coal	Coal
Economic Assumptions					
Capital recovery factor	15%	15%	15%	15%	10%
Feedstock cost ($/MMBtu)	2.50	5.00	2.23	2.23	2.23
Fuel cost ($/MMBtu)	2.50	2.23	2.23	2.23	2.23
Calculated Costs ($/MMBtu)					
Fuel + feedstock	3.34	5.45	2.97	4.13	3.73
Capital	1.26	1.26	2.37	4.79	1.75
O&M	0.65	0.65	1.00	2.42	1.21
Syngas Cost	5.25	7.36	6.34	11.34	6.69

Notes:
1. Syngas quality suitable for methanol or H_2 production.
2. Power plant fuel containing H_2 and CO_2.

equivalent of 2200 full power hours (intermittently) as assumed for the gas turbine plant. We have considered the possibility of purchasing off-peak electric power for heating an additional 2200 hours of operation, doubling the output. This strategy has the additional advantage of reducing the thermal cycling of the process plant. Currently, the price of off-peak power in Israel is about $0.035/kWh.

The analysis indicates that if the solar processing plants can be built for the assumed costs, then a solar biomass processing plant might be able to produce syngas at close to present costs in Israel if electricity supplement is feasible, or in a solar-only plant if oil costs increased by 33% (to $30/bbl). The Israel Ministry of Energy and Infrastructure estimates that the biomass potential of Israel from wastes is 820,000 tons of oil equivalent per year (32.5 x 10^{12} Btu/year). It is reported that a number of European cities transport municipal wastes by rail to points of disposal and that a similar rail network could transport most of the country's wastes to the Negev [39] at acceptable costs.

An alternative to the use of off-peak power for supplementing solar heat is the use of O_2. In this case, syngas costs would be expected to be at roughly the same level as off-peak power, but the

Table 6. Solar Thermochemical Syngas Production from Natural Gas

Technical Parameters		
Solar field	400,000 m^2	
Beam insolation	2500 $kWh/m^2/yr$	
Solar heat input to process	400,000 MWh/yr (1.36 x 10^{12} Btu/yr)	
Optional electrical supplement	400,000 MWh/yr off-peak power	
Syngas output, solar only	4.25 x 10^{12} Btu/yr	
Syngas output, solar + electric	8.5 x 10^{12} Btu/yr	
Feedstock input	3.41 x 10^{12} Btu/yr or 6.82 x 10^{12} Btu/yr	
Efficiencies		
Utilization of beam energy		58%
Receiver efficiency		82%
Mechanical availability, other losses		84.1%
Net solar thermal efficiency		40.0%
Syngas output/net feedstock + solar + electrical input		89%
Syngas output/gross feedstock + solar only		62.5%
Syngas output/gross feedstock + solar + power plant fuel		60.3%
Economic Assumptions		
Capital recovery factor, industry		15%/yr
Price of natural gas		$ 2.5/MMBtu
Price of off-peak power		$ 0.035/kWh
Capital Cost Breakdown ($ Millions)	**Solar**	**Solar + Electric**
Heliostat field ($110/$m^2$)	44	44
Receiver-reformer	44	44
Other solar (tower, optics, boiler)	15.5	15.5
Other chemical	6.4	6.4
Gas storage and compression	6.5	6.5
Balance of plant, indirects and contingency	39.4	39.4
Electric power input	NA	20
Total	134	154
Calculated Syngas Cost ($/MMBtu)		
Capital	4.73	2.72
O&M	0.63	0.36
Feedstock	2.01	2.01
Off-peak power	NA	1.65
Total	7.37	6.74

Table 7. Solar Thermochemical Syngas Production from Biomass

Technical Parameters		
Solar field	400,000 m^2	
Beam insolation	2500 $kWh/m^2/yr$	
Solar heat input to process	400,000 MWh/yr (1.36 x 10^{12} Btu/yr)	
Optional electrical supplement	400,000 MWh/yr off-peak power	
Syngas output, solar only	3.98 x 10^{12} Btu/yr	
Syngas output, solar + electric	7.96 x 10^{12} Btu/yr	
Feedstock input	3.31 x 10^{12} Btu/yr or 6.62 x 10^{12} Btu/yr	
Efficiencies		
Utilization of beam energy		58%
Receiver efficiency		82%
Mechanical availability, other losses		84.1%
Net solar thermal efficiency		40.0%
Syngas output/net feedstock + solar + electrical input		85%
Syngas output/gross feedstock + solar only		59%
Syngas output/gross feedstock + solar + power plant fuel		57%
Economic Assumptions		
Capital recovery factor, industry		15%/yr
Price of biomass feedstock		$ 2/MMBtu
Price of off-peak power		$ 0.035/kWh
Capital Cost Breakdown ($ Millions)	**Solar**	**Solar + Electric**
Heliostat field ($110/$m^2$)	44	44
Receiver-gasifier	33	33
Other solar (tower, optics)	14	14
Other chemical	11	11
Gas storage and compression	6.5	6.5
Balance of plant, indirects and contingency	48.5	48.5
Electric power input	NA	20
Total	157	177
Calculated Syngas Cost ($/MMBtu)		
Capital	5.92	3.34
O&M	1.38	1.04
Feedstock	1.66	1.66
Off-peak power	NA	1.76
Total	8.96	7.80

Table 8. Solar Thermochemical Syngas Production from Coal

Technical Parameters		
Solar field	400,000 m^2	
Beam insolation	2500 $kWh/m^2/yr$	
Solar heat input to process	400,000 MWh/yr (1.36 x 10^{12} Btu/yr)	
Optional electrical supplement	400,000 MWh/yr off-peak power	
Syngas output, solar only	4.24 x 10^{12} Btu/yr	
Syngas output, solar + electric	8.48 x 10^{12} Btu/yr	
Feedstock input	3.70 x 10^{12} Btu/yr or 7.40 x 10^{12} Btu/yr	
Efficiencies		
Utilization of beam energy		58%
Receiver efficiency		82%
Mechanical availability, other losses		84.1%
Net solar thermal efficiency		40.0%
Syngas output/net feedstock + solar + electrical input		84%
Syngas output/gross feedstock + solar only		60%
Syngas output/gross feedstock + solar + power plant fuel		57%
Economic Assumptions		
Capital recovery factor, industry		15%/yr
Price of coal		$ 2/MMBtu
Price of off-peak power		$ 0.035/kWh
Capital Cost Breakdown ($ Millions)	**Solar**	**Solar + Electric**
Heliostat field ($110/$m^2$)	44	44
Receiver-reactors	30	30
Fluidized-bed reactors	45	45
Other solar (tower, optics)	19	19
Other chemical	14	14
Gas storage and compression	6.5	6.5
Balance of plant, indirects and contingency	75.2	75.2
Electric power input	NA	20
Total	234	254
Calculated Syngas Cost ($/MMBtu)		
Capital	8.27	4.37
O&M	2.76	2.07
Feedstock	1.75	1.75
Off-peak power	NA	1.89
Total	12.78	10.08

amount of feedstock per unit syngas production would be roughly doubled during O_2 gasification, and the product composition would change during the daily cycle.

How should we interpret this cost analysis? In the near term, fuels produced from syngas must compete with fuels produced from natural gas and petroleum. With gas and oil at or near present prices, syngas-derived fuels are more expensive. With environmental credits, for example from processing of waste resources, it may be possible to find an economic niche for solar-assisted fuel production when the technology is ready.

The long-term prospects look more favorable. The solar technology will presumably be mature. Cheap oil and gas will be scarce. There may be severe restrictions on CO_2 emissions. Fuels derived from coal may determine the base market prices, or constitute the principal alternative. Under such conditions, solar-assisted fuel production may combine economic, resource, and environmental advantages.

Turning now to the closed chemical loop, its costs may be compared to the costs of other energy storage technologies applicable to solar energy. A study of alternative schemes for solar-thermal power, including storage alternatives, was made by the Phoebus Consortium [40]. They considered systems where the solar heat was transferred to air, molten salt, sodium, and boiling water. While the boiling water alternative had the lowest capital costs, it was not preferred because there was no practical energy storage, while the other options (including the preferred air system) had storage schemes. The boiling water system could be supported by a chemical storage system (Figure 11). Costs for such a system are compared in Table 9 to the costs of a comparable 100-MW_e Phoebus system derived from Reference 41. While the average power costs of all three alternatives of Table 9 are within a narrow range, the chemical storage alternative would be preferred because the power production could be concentrated more strongly into the peak-demand periods.

It was stated earlier that the LUZ solar thermal power plants supplement solar energy by burning fuel rather than using energy storage. Given the current and near-term fuel prices, this is a much cheaper alternative than the storage schemes of Table 9. However, in the longer term, it should be feasible to combine chemical storage using a solar tower as described here with the parabolic trough technology for generating steam.

Table 9. Solar Power Plants with Energy Storage

Type	Phoebus Air	Phoebus steam with chemical storage	Phoebus steam without storage
Technical Parameters			
Plant capacity (MW_e)	100	100	100
Solar field (m^2)	673,000	693,000	630,000
Steam conditions	140 bars/540°C	100 bars/500°C	100 bars/500°C
Beam insolation (kWh/m^2)	2500	2500	2500
Storage capacity (hr)	2.5	8	none
Power production (hr/yr)	2350	2500	1300
Capacity recovery factor	10%/yr	10%/yr	10%/yr
Capital Cost Breakdown ($ Millions)			
Heliostat field ($\$110/m^2$)	74.1	76.2	69.3
Receiver (heat)	17	5.5	5.5
Receiver (reformer)	NA	35	NA
Tower	7	8	7
Heat transport	15	10	7
Steam generator (methanator)	22	45	NA
Storage	75	20	NA
Power block	33	33	33
Balance of plant, indirects	60	60	40
Total	303	293	162
Power Costs ($/kWh)			
Capital	0.129	0.117	0.125
O&M	0.026	0.023	0.025
Total	0.155	0.140	0.150

5. SUMMARY AND CONCLUSIONS

Research in recent years has demonstrated the efficient use of solar thermal energy for driving chemical reforming reactions. In these highly endothermic reactions, hydrocarbons are reacted with steam or CO_2 over a catalyst to form a syngas composed primarily of H_2 and CO. The solar heat is applied to the reactor either indirectly through a working fluid (such as air heated in a solar receiver) or directly via reactor tubes or a porous catalytic reactor exposed to the concentrated solar radiation. In open-loop systems, the hydrocarbon feedstock (e.g., natural gas, pyrolized or gasified coal or oil shale, or low-quality hydrocarbon gases or waste) is upgraded in energy content by the chemically stored solar energy for uses described below. In closed-loop systems, a high-quality hydrocarbon feedstock such as CH_4 is similarly converted to syngas in the solar upgrading; the syngas is then stored or transported off-site prior to conversion back to CH_4 in a methanation reactor that recovers the solar energy as heat for industrial processes or power generation.

Closed-loop reforming/methanation systems can be used for storage (helping to match the solar resource to continuous industrial loads) and transport (between, for example, high-insolation solar collection sites and major industrial centers) of process heat and for short-term storage for peaking power generation. Open-loop systems can be used for direct fuel production (for gas turbine applications); for production of syngas feedstock for further processing to specialty chemicals and plastics and bulk NH_3, H_2, and liquid fuels (CH_3OH and gasoline); and directly for industrial processes such as iron ore reduction. In addition, reforming of organic chemical wastes and hazardous materials can be used, not for the energy value, but for the high-efficiency destruction capabilities of steam reforming.

The energy storage and fuel processing solar technologies should be competitive economically in the long term with increasingly scarce fossil fuels. The environmental benefits of solar reforming technology in reducing CO_2 and other emissions should earn a high degree of public support. There are needs for near-term niche applications to increase industrial support for scaling up to commercial size. Such applications may be found in stretching natural gas supplies for power plant fuel, in producing CH_3OH and other fuels from biomass wastes, and in detoxification of hazardous organic wastes.

6. REFERENCES

1. Spiewak, I., "Technologies to be Developed for High Temperature Central Receivers," *United Nations Seminar on Solar Power Systems*, Alushta, CRIMEA, 1991.

2. Antal, M. J., Jr., "Biomass Pyrolysis: A Review of the Literature," *Advances in Solar Energy*, vol. 2, American Chemical Society, p. 175, 1985.

3. Reed, T. B., "Principles and Technology of Biomass Gasifications," *Advances in Solar Energy*, vol. 2, American Chemical Society, p. 125, 1985.

4. Keller, J., *Fuel Processing Technology*, vol. 24, p. 247, 1990.

5. Beenackers, A., and W. Van Swaay, eds., "Advanced Gasification, Methanol Production from Wood, Results of the EEC Pilot Programme," *Solar Energy R&D in the European Community*, Series E, vol. 8, Energy from Biomass, 1986.

6. Schulten, R., K. Kugeler, and W. Frohling, *Progress in Nuclear Energy*, vol. 14, no. 3, pp. 227-268, 1984.

7. Chubb, J. A., *Solar Energy*, 24, p. 341, 1980.

8. McCrary, J. H., G. E. McCrary, T. A. Chubb, J. J. Nemecek, and D. E. Simmons, *Solar Energy*, vol. 29, p. 141, 1982.

9. Anikeev, V. I., V. N. Parmon, V. A. Kirillov, and K. I. Zamarev, *Int. J. Hydrogen Energy*, vol. 15, p. 275, 1990.

10. Levitan, R., M. Levy, H. Rosin, and R. Rubin, "Closed Loop Operation of a Solar Chemical Heat Pipe at the Weizmann Institute Solar Furnace," *Proceedings of the Fifth Symposium on Solar Thermal Technology*, Davos, Switzerland, 1990.

11. Hunt, A. J., I. Hodara, F. J. Miller, and J. E. Noring, "Direct Absorption Receivers for Catalyzing Chemical Reactions," *Proceedings of the Fourth International Symposium on Solar Thermal Technology*, Santa Fe, NM, 1988.

12. Buck, R., J. F. Muir, R. E. Hogan, and R. D. Skocypec, *Solar Energy Materials*, vol. 24, pp. 449-463, 1991.

13. Muir, J. F., R. E. Hogan, Jr., R. D. Skocypec, and R. Buck, "Solar Reforming of Methane in a Direct Adsorption Catalytic Reactor on a Parabolic Dish: I-Test and Analysis," *1991 ASME-JSME International Solar Energy Conference*, Reno, NV, March 17-22, 1991.

14. Bohmer, M., U. Langnickel, J. A. Rodriguez, M. Sanchez, "Solar Steam Reforming of Methane," *Proc. Biennial Congr. Int. Solar Energy Soc.*, eds. M. E. Arden, S. M. A. Burley, and M. Coleman. Denver, CO, August 19-23, 1991, vol. 1, Part II, Pergamon Press, Oxford, pp. 828-833, 1991.

15. Becker, M., and M. Bohmer, eds. *Proc. Final Presentation GAST, the Gas-Cooled Solar Tower Technology Program*, Lahnstein, FRG, May 30-31, 1988, Springer Verlag, Berlin, Germany, 1989.

16. Langnickel, U., M. Bohmer, K.-H. Funken, "Solare Dampfrefor mierung von Methan—Darstellung von Testergebnissen," *Deutsch Gesellschaft fur Sonnenergie e.V.—DGS (Hsrg.)*, 8, Internaltionales Sonneforum, June 30-July 2, 1992, Band 2, Berlin, Germany, S. 1353-1357, 1992.

17. Langnickel, U., M. Bohmer, J. A. Rodriquez, M. Sanchez, and A. Velarde, "Solar Steam Reforming of Methane," *Sixth International Symposium on Solar Thermal Concentrating Technologies*, vol. 28, no. 9, October 2, 1992, Mojacar (Almeria), Spain, 1992.

18. Spiewak, I., M. Epstein, and A. Segal, "The Weizmann Institute of Science 480-kW Reformer System," IEA SSPS Task V, *Proceedings of the Workshop on Methane Reforming*, Koeln, p. 129, 1991.

19. Epstein, M., and I. Spiewak, "350-kW Methanator for Solar Chemical Heat Pipe," IEA SSPS Task V, *Proceedings of the Workshop on Methane Reforming*, Koeln, p. 139, 1991.

20. Keehan, D. K. and J. T. Richardson, *Carbon Dioxide Rich Methanation Kinetics on Supported Rhodium and Nickel Catalysts*, SAND88-7149, Sandia National Laboratories, Albuquerque, NM, U.S.A., 1989.

21. Richardson, and S. A. Paripatyadar, "Carbon Dioxide Reforming of Methane with Supported Rhodium," *Appl. Catal.*, in press.

22. Nimlos, M. R., and T. A. Milne, "Direct Mass Spectrometric Studies of the Destruction of Hazardous Waste, Part I: Catalytic Steam Reforming of Chlorinated Hydrocarbons," *Env. Sci. and Tech.*, vol. 26, pp. 545-552, 1992.

23. Hogan, R. E., and R. D. Skocypec, *Proc. Solar Energy Technology-1989*, SET vol. 8, J. T. Beard and H. C. Hewitt, eds., ASME Winter Annual Meeting, p. 31, 1989.

24. Skocypec, R. D., and R. E. Hogan, *Proc. Solar Energy Technology-1989*, SET vol. 8, J. T. Beard and H. C. Hewitt, eds., ASME Winter Annual Meeting, p. 39, 1989.

25. Skocypec, R. D., and R. E. Hogan, "Investigation of a Direct Catalytic Absorption Reactor for Hazardous Waste Destruction," *Proc. Solar Energy-1990*, 12th ASME Solar Energy Conference, 1990.

26. Hogan, R. E., R. D. Skocypec, R. B. Diver, J. F. Fish, M. Garrait, and J. T. Richardson, "A Direct Absorber Reactor/Receiver for Solar Thermal Applications," *Eleventh Int. Symp. on Chemical Reaction Engineering*, Toronto, Canada, 1990.

27. Murray, J. P., "A Study of Cellulose Gasification in a Fluidized Bed Using a High-Temperature Furnace," Thesis, U. of Minnesota, 1989.

28. Ingel, G., M. Levy, and J. Gordon, "Gasification of Oil Shales by Solar Energy," *Solar Energy Materials*, vol. 24, pp. 478-489, 1990.

29. Kubiak, H., and H. Lohner, "Study Relating to the Use of Solar Energy for the Allothermal Gasification of Coal," *Solar Thermal Energy Utilization,* vol. 6, M. Becker, K.-H. Funken, and G. Schneider, eds., Final Reports 1990, Springer-Verlag, Berlin, Germany, pp. 327-340, 1992.

30. Knop, K., K. H. van Heek, and H. Kubiak, "Entwicklungsstand und Anwendungsmöglichkeltendes MBG-Kohlevergasungsverfahrens," *Stahlund Eisen*, no. 8, pp. 131-136, 1990.

31. Martinsen, D., and M. Walbeck, "Market and Cost Situation for Nuclear CHP in Germany," *Workshop on the Economics of the Solar Thermochemical Pipeline Concept*, Israel, 1984.

32. Epstein, M., "Preliminary Economic Analysis of the Thermochemical Pipeline Concept Based on Solar Thermal Receivers as Energy Source," Weizmann Institute, Israel, 1983.

33. Muller, W. D., "Solar Reforming of Methane Utilizing Solar Heat," *Solar Thermal Energy Utilization*, vol. 3, M. Becker, ed., Solar Thermal Energy for Chemical Processes, German Studies on Technology and Applications, Springer-Verlag, Berlin, Germany, pp. 1-179, 1987.

34. Grubler, A., *Entropie*, no. 164/165, p. 29, 1991.

35. Clark, W. C., *Carbon Dioxide Review: 1982*, Oxford University Press, 1982.

36. Dessus, B., B. Devin, and F. Pharabod, "Le Potentiel Mondial des Energies Renouvelables," *Extraits de la Houille Blanche*, no. 1-1992 RGE, 48, Paris, France, 1992.

37. Steinberg, M., and H. C. Cheng, *Intl. J. Hydrogen Energy*, 14, p. 797, 1989.

38 Spiewak, I., "Cost Targets for the Solar Gasification of Carbonaceous Materials," *Sixth Symposium on Solar Thermal Concentrating Technologies*, Mojacar (Almeria), Spain, 1992.

39. Keegan, D., "Refuse Disposal by Rail," *Energy from Refuse International Conference*, Tel Aviv, Israel, June 1990.

40. Ministerio de Industria y Energia, *Phoebus Feasibility Study-Phase 1, Presentation of Results*, Madrid, Spain, December 1987.

41. Ministerio de Industria y Energia, *Phoebus Phase 1B Feasibility Study-Executive Summary*, Madrid, Spain, March 1990.

DISTRIBUTION

U.S. Department of Energy (5)
Forrestal Building
Code EE-132
1000 Independence Avenue, SW
Washington, DC 20585
Attn: G. Burch
S. Gronich

U.S. Department of Energy
Forrestal Building
Code EE-222
1000 Independence Avenue, SW
Washington, DC 20585
Attn: Frank Wilkins

U.S. Department of Energy (2)
Forrestal Building
Code EE-13
1000 Independence Avenue, SW
Washington, DC 20585
Attn: R. Annan

U.S. Department of Energy (2)
Albuquerque Operations Office
P. O. Box 5400
Albuquerque, NM 87115
Attn: G. Tennyson
N. Lackey

U.S. Department of Energy
San Francisco Operations Office
1333 Broadway
Oakland, CA 94612
Attn: R. Hughey

Acurex Corporation (2)
555 Clyde Avenue
Mountain View, CA 94039
Attn: J. Schaefer
H. Dehne

Advanced Thermal Systems
7600 East Arapahoe Rd., Suite 215
Englewood, CO 80112
Attn: Dave Gorman

Agua y Energia Electrica
Sociedad del Estado
Gabato 3713
1826 Remedios de Escalada
Buenos Aires, ARGENTINA
Attn: Grupo - Fuentes Alternas

Allegheny Ludlum Steel (2)
Market and Product Development
Alabama and Pacific Avenues
Brackenridge, PA 15014
Attn: J. M. Hunt
J. P. Ziemianski

Allegheny Ludlum Steel
80 Valley St.
Wallingford, CT 06492
Attn: J. J. Halpin

Analysis Review & Critique
6503 81st Street
Cabin John , MD 20818
Attn: C. LaPorta

Arizona Public Service Co.
P.O. Box 53999
Phoenix, AZ 85072-3999
Attn: J. McGurik

Arizona Solar Energy Office
Dept. of Commerce
3800 N. Central
Phoenix, AZ 85012
Attn: F. Mancini

Australian National University
Department of Engineering Physics
P. O. Box 4
Canberra ACT 2600 AUSTRALIA
Attn: S. Kaneff

Australian National University
Energy Research Centre (3)
R.S. Phy. Sc.
Canberra ACT 2600 AUSTRALIA
Attn: K. Inall
P. Carden
K. Lovegrove

Barber-Nichols Engineering
6325 West 55th Ave.
Arvada, CO 80002
Attn: R. Barber

Battelle Pacific Northwest Laboratory (2)
P.O. Box 999
Richland, WA 99352
Attn: D. Brown

BDM Corporation
1801 Randolph Street, S.E.
Albuquerque, NM 87106
Attn: W. E. Schwinkendorf

Bechtel National, Inc. (4)
50 Beale Street
50/15 D8
P.O. Box 3965
San Francisco, CA 94106
Attn: P. DeLaquil B. Kelly
S. Nickovich J. Egan

Bomin Solar
Industriestr. 8
D-7850 Lorrach GERMANY
Attn: Dr. Hans Jurgen Kleinwachter

Black & Veatch Consulting Engineers (2)
P.O. Box 8405
Kansas City, MO 64114
Attn: J. C. Grosskreutz

Tom Brumleve
1512 Northgate Road
Walnut Creek, CA 94598

California Energy Commission
1516 Ninth Street, MS-43
Sacramento, CA 95814
Attn: Alec Jenkins

California Polytechnic University
Dept. of Mechanical Engineering
3801 West Temple Avenue
Pomona, CA 91768
Attn: William Stine

California Public Utilities Commission
Resource Branch, Room 5198
455 Golden Gate Avenue
San Francisco, CA 94102
Attn: T. Thompson

Central and Southwest Services
Mail Stop 7RES
1616 Woodall Rogers Freeway
Dallas, TX 75202
Attn: E. L. Gastineau

Centro Investigaciones Energeticas (4)
Medioambientales y Technologicas
Institudo de Energias Renovables
Avda. Complutense, 22
28040 Madrid SPAIN
Attn: M. Macias M. Romero
E. Conejero J. M. Figarola

Clever Fellows
Innovation Consortium, Inc.
R.D. 1, Box 410, River Road
Melrose, NY 12121
Attn: J. A. Corey, P.E.

Cummins Power Generation (2)
Mail Code 50179
Box 3005
Columbus, IN 47202-3005
Attn: Dr. Isoroku Kubo

Cummins Power Generation South
150 Tannehill Drive
Abilene, TX 79602
Attn: M. McGlaun

Dan Ka Products, Inc.
3905 South Mariposa
Englewood, CO 80110
Attn: D. Sallis

Dynatherm Corporation
1 Beaver Court
P. O. Box 398
Cockeyville, MD 21030
Attn: Dr. W. Bienert
D. Wolf

DLR (30)
Pfaffenwaldring 38-40
7000 Stuttgartt 80 GERMANY
Attn: R. Buck

DLR-Cologne, MD-ET
Linder Hohe
P. O. Box 90 60 58
D-51140 Cologne GERMANY
Attn: M. Becker W. Meinecke
M. Boehmer

Electric Power Research Institute
P. O. Box 10412
Palo Alto, CA 94303
Attn: J. Schaeffer

El Paso Electric Company
303 N. Oregon, 10th Floor
P. O. Box 982
El Paso, TX 79960
Attn: D. Gutierrez

Energy Technology Engr. Center
Rockwell International Corp.
P. O. Box 1449
Canoga Park, CA 91304
Attn: W. Bigelow

Engineering Perspectives
20 19th Ave.
San Francisco, CA 94121
Attn: J. Doyle

ENTECH, Inc.
P. O. Box 612246
DFW Airport, TX 75121
Attn: R. Walters

Flachglas Solartechnik GmbH
Muhlengasse 7
D-7000 Kohn 1, GERMANY
Attn: J. Benemann

Flachglas Solartechnik GmbH (2)
Theodor-Heuss-Ring 1
5000 Koln 1, GERMANY
Attn: Dr. M. Geyer
I. Susemihl

Florida Solar Energy Center
300 State Road, Suite 401
Cape Canaveral, FL 32920
Attn: Library

Ford Aerospace
Ford Road
Newport Beach, CA 92663
Attn: R. Babbe

Foster Wheeler Solar Development
Corporation (2)
12 Peach Street Hill Road
Livingston, NJ 07039
Attn: M. Garber
R. Zoschak

Fricker Consulting
Breitestr. 22
CH 8544 Rickenbach, SWITZERLAND
Attn: Hans Fricker

Garrett Turbine Engine Co.
111 South 34th Street
P. O. Box 5217
Phoenix., AZ 85010
Attn: E. Strain

Georgia Institute of Technology
GTRI/EMSL Solar Site
Atlanta, GA 30332
Attn: T. Brown

Georgia Power Co. (2)
7 Solar Circle
Shenandoah, GA 30265
Attn: Dennis Keebaugh
W. King

Harris Corporation (2)
Government Aerospace Systems Division
P. O. Box 9400
Melbourne, FL 32902
Attn: K. Schumacher

Industrial Solar Technologies (4)
5775 West 52nd Ave.
Denver, CO 80212
Attn: Randy Gee
K. May

Institute of Gas Technology
34245 State Street
Chicago, IL 60616
Attn: Library

Interatom GmbH (2)
P. O. Box D-5060
Bergisch-Gladbach, GERMANY
Attn: M. Kiera

Jet Propulsion Laboratory
4800 Oak Grove Drive
Pasadena, CA 91109
Attn: M. Alper

KJC Operating Company
41100 Highway 395
Boron, CA 93516
Attn: Russ Miller
Dave Kearney

Lawrence Berkeley Laboratory
MS 90-2024
One Cyclotron Road
Berkeley, CA 94720
Attn: A. Hunt

Leo Gutierrez
434 School Street
Livermore, CA 94550

Los Angeles Dept. of Water and Power
Alternate Energy Systems
111 North Hope Street, Rm. 661A
Los Angeles, CA 90012
Attn: B. Engels

McDonnell-Douglas Astronautics Company (3)
5301 Bolsa Avenue
Huntington Beach, CA 92647
Attn: R. L. Gervais D. Steinmeyer
J. Rogan

Mechancial Technology, Inc. (2)
968 Albany Shaker Road
Latham, NY 12110
Attn: G. Dochat
J. Wagner

Meridian Corporation (2)
4300 King Street, Suite 400
Alexandria, VA 22302-1508
Attn: D. Kumar

NASA/Lewis Research Center (4)
21000 Brookpark Road
Cleveland, OH 44135
Attn: R. Shaltens
J. Schrieber

National Renewable Energy Laboratory (6)
1617 Cole Blvd.
Golden, CO 80401-3393
Attn: T. Williams G. Jorgensen
A. Lewandowski L. M. Murphy
T. Wendelin M. Bohn

Nevada Power Co.
P. O. Box 230
Las Vegas, NV 89151
Attn: Mark Shank

New Mexico Solar Energy Institute
New Mexico State University
Box 3 SOL
Las Cruces, NM 88003

Northern Research & Eng. Corp
39 Olympia Avenue
Woburn, MA 01801-2073
Attn: Dr. James B. Kesseli

Pacific Gas and Electric Co. (2)
3400 Crow Canyon Road
San Ramon, CA 94526
Attn: Steve Hester
J. Iannucci

Paul Scherrer Institute (2)
CH-5232 Villigen PSI
SWITZERLAND
Attn: Peter Kuhn
A. Teinfeld

Plataforma Solar de Almeria
Apartado 649
E 04001 Almeria, SPAIN
Attn: M. Sanchez

Power Kinetics, Inc. (2)
415 River Street
Troy, NY 12180-2822
Attn: W. E. Rogers

Renewable Energy Institute
1001 Connecticut Avenue NW
Suite 719
Washington, DC 20036
Attn: Kevin Porter

Rocketdyne Division
6633 Canoga Park Avenue
Canoga Park, CA 91304
Attn: W. Marlatt

Sacramento Municipal Utility District
Generation Systems Planning
Power Systems Department
6201 S Street
P. O. Box 15830
Sacramento, CA 96852-1830
Attn: R. P. Wichert, P.E.

San Diego Gas & Electric Co.
P.O. Box 1831
San Diego, CA 92112
Attn: R. Figueroa

Schlaich, Bergermann & Partner
Hohenzollernstr. 1
D-7000 Stuttgart 1 GERMANY
Attn: W. Schiel

Science Applications International Corp. (2)
15000 W. 6th Avenue, Suite 202
Golden, CO 80402
Attn: Kelly Beninga, Manager
Energy Projects Division

Science Applications International Corp.
Mail Stop 32
10260 Campus Point Court
San Diego, CA 92121
Attn: B. Butler

Sci-Tech International
Advanced Alternative Energy Solutions
5673 W. Las Positas Blvd., Suite 205
P. O. Box 5246
Pleasanton, CA 84566
Attn: U. Ortabasi

Solar Energy Industries Association (2)
777 N. Capitol St., N.E., Suite 805
Washington, DC 20002-4226
Attn: Ken Sheinkopf
S. Sklar

Solar Kinetics, Inc. (2)
P.O. Box 540636
Dallas, TX 75354-0636
Attn: J. A. Hutchison
P. Schertz

Solar Power Engineering Co. Inc. (10)
P. O. Box 91
Morrison, CO 80468
Attn: H. Wroton
D. Bielenberg (9)

Solar Steam
P. O. Box 32
Fox Island, WA 98333
Attn: D. E. Wood

South Coast AQMD
9150 Flair Drive
El Monte, CA 91731
Attn: L. Watkins

Southern California Edison Co.
P.O. Box 800
Rosemead, CA 91770
Attn: Mark Skowronski

SRS Technologies
990 Explorer Blvd., NW
Huntsville, AL 35806
Attn: R. Bradford

Stearns Catalytic Corporation
P. O. Box 5888
Denver, CO 80217
Attn: T. E. Olson

Stirling Machine World
1823 Hummingbird Court
West Richland, WA 99352-9542
Attn: B. Ross

Stirling Technology Company (2)
2952 George Washington Way
Richland, WA 99352
Attn: M. A. White

Stirling Thermal Motors (2)
275 Metty Drive
Ann Arbor, MI 48103
Attn: L. Johansson

Stone and Webster Engineering Co.
P. O. Box 1214
Boston, MA 02107
Attn: R. W. Kuhr

Sunpower, Inc.
6 Byard Street
Athens, OH 45701
Attn: W. Beale

Thermacore, Inc. (2)
780 Eden Road
Lancaster, Pa 17601
Attn: D. Ernst

Tom Tracey
6922 South Adams Way
Littleton, CO 80122

United Solar Technologies, Inc.
3434 Martin Way, Suite One
Olympia, WA 98506
Attn: Richard Kelly

University of Arizona
Engineering Experimental Station
Harvil Bldg., Room 151-D
Tucson, AZ 85721
Attn: D. Osborne

University of Chicago
Enrico Fermi Institute
5640 Ellis Avenue
Chicago, IL 60637
Attn: J. O'Gallagher

University of Houston (2)
Solar Energy Laboratory
4800 Calhoun
Houston, TX 77704
Attn: L. Vant-Hull
J. Richardson

University of Minnesota (2)
Dept. of Mechanial Engineering
111 Church St., SE
Minneapolis, MN 55455
Attn: E. A. Fletcher
T. Simmon

University of Nevada at Las Vegas
Mechanical Engineering Department
Las Vegas, NM 89154
Attn: B. Boehm

University of New Mexico (2)
Department of Mechanical Engineering
Albuquerque, NM 87131
Attn: M. W. Wildin
W. A. Gross

W G Associates
6607 Stonebrook Circle
Dallas, TX 75240
Attn: V. Goldberg

Weizmann Institute of Science
76100 Rehovot, ISRAEL
Attn: Michael Epstein
Irving Spiewak

David White
3915 Frontier Lane
Dallas, TX 95214

3M-Energy Control Products (2)
207-1W 3M Center
St. Paul, MN 55144
Attn: R. Dahlen

01513/MS 0835 R. E. Hogan, Jr. (5)
01513/MS 0835 R. D. Skocypec
01513/MS 0835 D. R. Adkins
01708/MS 1349 R. E. Loehman
01846/MS 0607 D. H. Doughty
01846/MS 0607 C. S. Ashley
02402/MS 0961 J. L. Ledman
02476/MS 0959 F. P. Gerstle
02476/MS 0959 S. T. Reed
06200/MS 0735 D. E. Arviz
06200/MS 0735 A. VanArsdall
06201/MS 0704 P. C. Klimas
06213/MS 0752 A. R. Mahoney
06215/MS 1127 C. P. Cameron
06215/MS 1127 R. M. Edgar
06215/MS 1127 Library (5)
06216/MS 0703 C. E. Tyner
06216/MS 0703 J. R. Anderson
06216/MS 0703 C. E. Andraka
06216/MS 0703 L. J. Branstetter
06216/MS 0703 C. W. Bennett
06216/MS 0703 J. M. Chavez
06216/MS 0703 R. B. Diver
06216/MS 0703 D. R. Gallup
06216/MS 0703 J. W. Grossman
06216/MS 0703 G. J. Kolb
06216/MS 0703 M. R. Lewis
06216/MS 0703 T. R. Mancini
06216/MS 0703 D. F. Menicucci
06216/MS 0703 J. B. Moreno
06216/MS 0703 T. A. Moss
06216/MS 0703 M. R. Prairie
06216/MS 0703 Library (20)
07141/MS 0899 Technical Library (5)
07151/MS 0619 Technical Publications (3)
07613-2/MS 0100 Document Processing for DOE/OSTI (8)
08523-2/MS 9018 Central Technical Files

☆ U.S. Government Printing Office 1994–573-110-02027

END

DATE FILMED

3/28/94