Conf-930920--271

LBL-35004
UC-414

Lawrence Berkeley Laboratory
UNIVERSITY OF CALIFORNIA

Engineering Division

Presented at the IEEE Magnet Technology Conference, Victoria, BC, Canada, September 20–24, 1993, and to be published in the Proceedings

The g-2 Storage Ring Superconducting Magnet System

M.A. Green

September 1993

RECEIVED
FEB 08 1994
OSTI

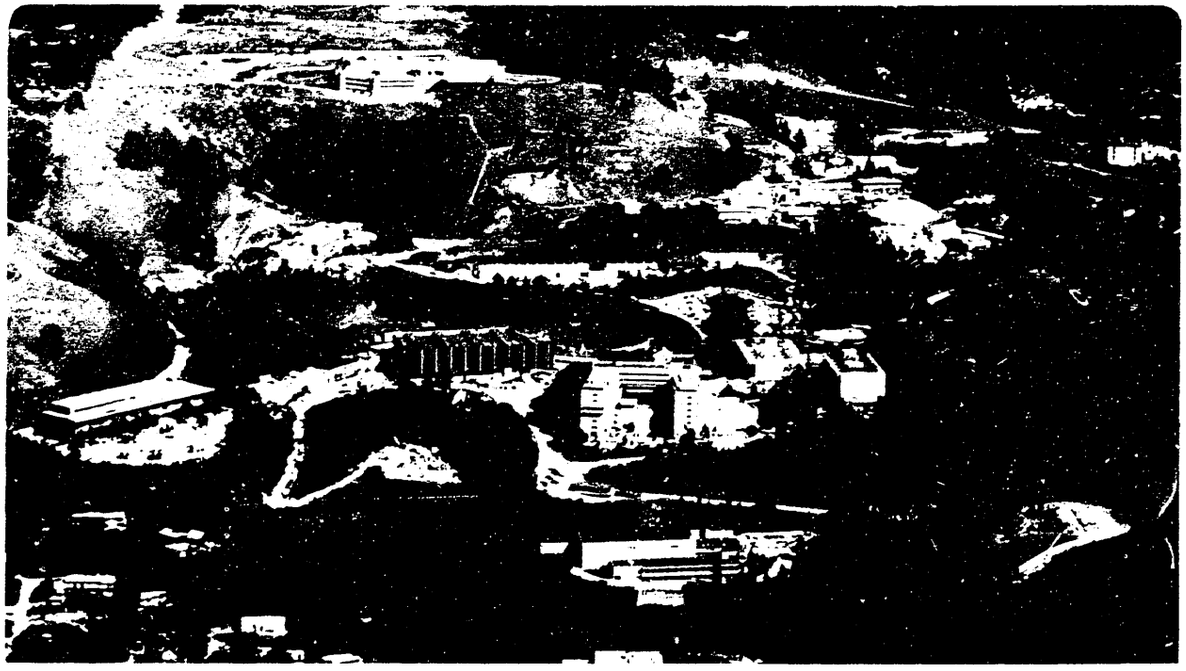

Prepared for the U.S. Department of Energy under Contract Number DE-AC03-76SF00098

DISCLAIMER

This document was prepared as an account of work sponsored by the United States Government. Neither the United States Government nor any agency thereof, nor The Regents of the University of California, nor any of their employees, makes any warranty, express or implied, or assumes any legal liability or responsibility for the accuracy, completeness, or usefulness of any information, apparatus, product, or process disclosed, or represents that its use would not infringe privately owned rights. Reference herein to any specific commercial product, process, or service by its trade name, trademark, manufacturer, or otherwise, does not necessarily constitute or imply its endorsement, recommendation, or favoring by the United States Government or any agency thereof, or The Regents of the University of California. The views and opinions of authors expressed herein do not necessarily state or reflect those of the United States Government or any agency thereof or The Regents of the University of California and shall not be used for advertising or product endorsement purposes.

This report has been reproduced directly from the best available copy.

Lawrence Berkeley Laboratory is an equal opportunity employer.

LBL-35004

THE g-2 STORAGE RING SUPERCONDUCTING MAGNET SYSTEM

Michael A. Green
and the g-2 Collaboration

MT-13 Magnet Technology Conference
Victoria Conference Center
Victoria, BC., Canada
20-24 September 1993

To be published in the IEEE Transactions on Magnetics

*This work was performed at the Lawrence Berkeley Laboratory with the support of the Director of the Office of Energy Research, Office of High Energy and Nuclear Physics, High Energy Physics Division, U. S. Department of Energy under Contracts No. DE-AC03-76SF00098 and DE-AC02-76CH00016.

MASTER

DISTRIBUTION OF THIS DOCUMENT IS UNLIMITED

The g-2 Storage Ring Superconducting Magnet System

The Members of the g-2 Collaboration

Abstract--**The g-2 mu lepton (muon) storage ring is a single dipole magnet that is 44 meters in circumference. The storage ring dipole field is created by three large superconducting solenoid coils. A single outer solenoid, 15.1 meters in diameter, carries 254 kA. Two inner solenoids, 13.4 meters in diameter, carry 127 kA each in opposition to the current carried by the outer solenoid. A room temperature C shaped iron yoke returns the magnetic flux and shapes the magnetic field in a 180 mm gap where the stored muon beam circulates. The gap induction will be 1.47 T. This report describes the three large superconducting solenoids, the cryogenic system needed to keep them cold, the solenoid power supply and the magnet quench protection system.**

I. BACKGROUND

This report describes a superconducting storage ring magnet system for an experiment for precision measurements of the g-2 value of mu mesons at the Brookhaven National Laboratory [1]. The goal of the experiment is measure the g-2 value to an accuracy of 0.35 ppm, which is a factor of 20 better than the present experimental accuracy of 7.3 ppm from the latest experiment at CERN [2,3]. The experiment requires a very high precision storage ring for 3.094 GeV/c muons.

The principle equipment for the g-2 experiment is a superferric storage ring with an average induction of 1.473 T and a central orbit diameter of 14.22 m. The induction over the muon storage volume with a cross-sectional diameter of 90 mm must be good to about 0.1 ppm. The field uniformity and stability in the orbit volume are unusually stringent.

The g-2 storage ring consists of three superconducting solenoid coils. The two smaller inner solenoids (13. 4 m in diameter) are hooked up in opposition to the larger outer solenoid (15.1 m in diameter) to form a dipole field. The magnetic flux is carried by a continuous C shaped iron yoke. The three solenoids with the iron form a continuous dipole similar to the Brookhaven Cosmotron. (Fig. 1 shows a cross-section of the g-2 magnet.) Muon beam focusing is achieved through the use of electrostatic quadrupoles distributed around the ring within the magnet gap. The muon beam is injected into the ring through the iron and through the outer coil cryostat through a shielded inflector magnet that has essentially zero field where the injected beam passes into the storage ring. The open part of the C points toward the center of the storage ring. The g-2 experiment detectors are located inside the magnet ring. Interconnection of the cryogenic system and the coil current leads will be made on the outside of the ring so that the leads can be magnetically shielded from the orbiting muon beam in the storage ring.

The required uniform dipole field is created by shaping the iron pole pieces and by correction coils on the pole faces. The iron is installed in twelve 30 degree sectors each of which has a mass of 56.7 metric tons. The twelve iron segments will be assembled with a gap between segments that is less than 0.25 mm.

The use of superconducting coils rather than water cooled coils has the following advantages: 1) Coil dimensional stability with time is ensured. The coil temperature changes vary little with time and the thermal contraction coefficient is low at the coil operating temperature of 4.4 K. 2) There is thermal independence of the iron. The iron temperature is not controlled by the coil temperature. 3) The coil power requirements including the refrigeration are greatly reduced 4) The power supply is a low voltage supply. This coupled with a relatively high magnet self inductance ensures that there will be low ripple currents.

II. THE SOLENOID MAGNETS

Two sizes of solenoids have been fabricated at the Brookhaven National Laboratory. The two 13.390 meter diameter inner solenoids have twenty-four turns each that carry 5300 amperes. The two inner solenoids buck out a single outer solenoid that is 15.094 meters in diameter. The outer solenoid has two twenty-four turn coils which carry 5300 amperes. These coils are separated by about 150 mm so that the muon beam can be injected into the storage ring. Table 1 presents the parameters for the g-2 solenoid coils and their aluminum mandrels. The overall mass for the three solenoids and their cryostats is about 11200 kg. About 6200 kg is cold mass.

Each of the inner coils is wound on a 6061 aluminum mandrel that is cooled by two-phase helium flowing in a single turn of rectangular cooling tube. The coil is cooled by conduction to the mandrel. The two outer coils are mounted on a single 6061 aluminum mandrel that is cooled by two turns of two-phase helium cooling tube attached to the outer mandrel. As with the inner coils, the outer coils are cooled by conduction to the mandrel. The mandrels also act as a shorted secondary circuit during a quench. Quench back from the coil mandrels will cause all of the solenoid coils to turn normal during a quench [4].

The solenoid coils were wound in the horizontal position (with the coil axis perpendicular to the floor). Once the coils were wound and cured on the mandrel, the shields and the cryostat were built around the coils. Fig. 2 shows the 15.1 meter diameter outer solenoid after coil winding.

Manuscript received September 20, 1993. This work was performed with the support of the Office of High Energy and Nuclear Physics, U. S. Dept. of Energy

Table 1 g-2 Solenoid Magnet System Parameters

Number of Inner Coils	2
Inner Coil Diameter (m)	13.354
Number of Inner Coil Mandrels	2
Inner Coil Mandrel Diameter (m)	13.390
Inner Coil Cold Mass (kg)	180
Inner Coil Mandrel Cold Mass (kg)	860
Number of Outer Coils	2
Outer Coil Diameter (m)	15.024
Number of Outer Coil Mandrels	1
Outer Coil Mandrel Diameter (m)	15.094
Outer Coil Cold Mass (kg)	205
Outer Coil Mandrel Cold Mass (kg)	2580
Beam Orbit Diameter (m)	14.22
Solenoid Design Current (A)	5300
Solenoid Magnet System Self Inductance (H)	0.39
Central Induction at the Beam Orbit* (T)	1.470
Stored Magnetic Energy* (MJ)	5.5
Solenoid Magnet System Cold Mass** (kg)	~6200
Solenoid Magnet System Overall Mass (kg)	~11200

* at the Magnet Design Current of 5300 A
** includes 1130 kg of coil covers which are not part of the mandrels

The g-2 solenoid superconductor is the same superconductor that was used for the TOPAZ thin solenoid at KEK. The Nb-Ti superconductor is stabilized by ultra pure aluminum that has been coextruded along with a copper matrix conductor. The zero field residual resistance ratio of aluminum matrix material is 2000 or more. The TOPAZ conductor has bare matrix dimensions of 3.6 mm by 18 mm. The insulation consists of three layers of 0.055 mm thick Kapton-fiberglass laminate. The solenoid superconductor has the following parameters: 1) The copper to superconductor ratio is 1 to 1; 2) the aluminum to superconductor ratio is 20 to 1; 3) the copper matrix conductor contains 1400 filaments which are about 50 micrometers in diameter; 4) the twist pitch for the superconductor is 27 mm; and the critical current for the conductor is 9270 A at 2.4 T and 4.2 K. The conductor should be able to carry the full solenoid coil current when the operating temperature is as high as 6.0 K. The projected operating temperature for the g-2 solenoid magnet system is expected to be about 4.5 K.

III. THE g-2 MAGNET COOLING SYSTEM

The three g-2 solenoids, the superconducting leads between solenoids and a shielded superconducting inflector magnet will be cooled by two-phase helium that comes from a refrigerator bought by the Brookhaven National Laboratory during the mid 1970's. The refrigerator has two piston expanders and it receives its high pressure helium gas from a pair of screw compressors each capable of delivering up to 60 g s^{-1} of helium gas at a pressure of 1.8 MPa. The refrigerator cold box is capable of delivering up to 700 W with liquid nitrogen precooling in the upper stages of the machine. At the full output of the machine, the three g-2

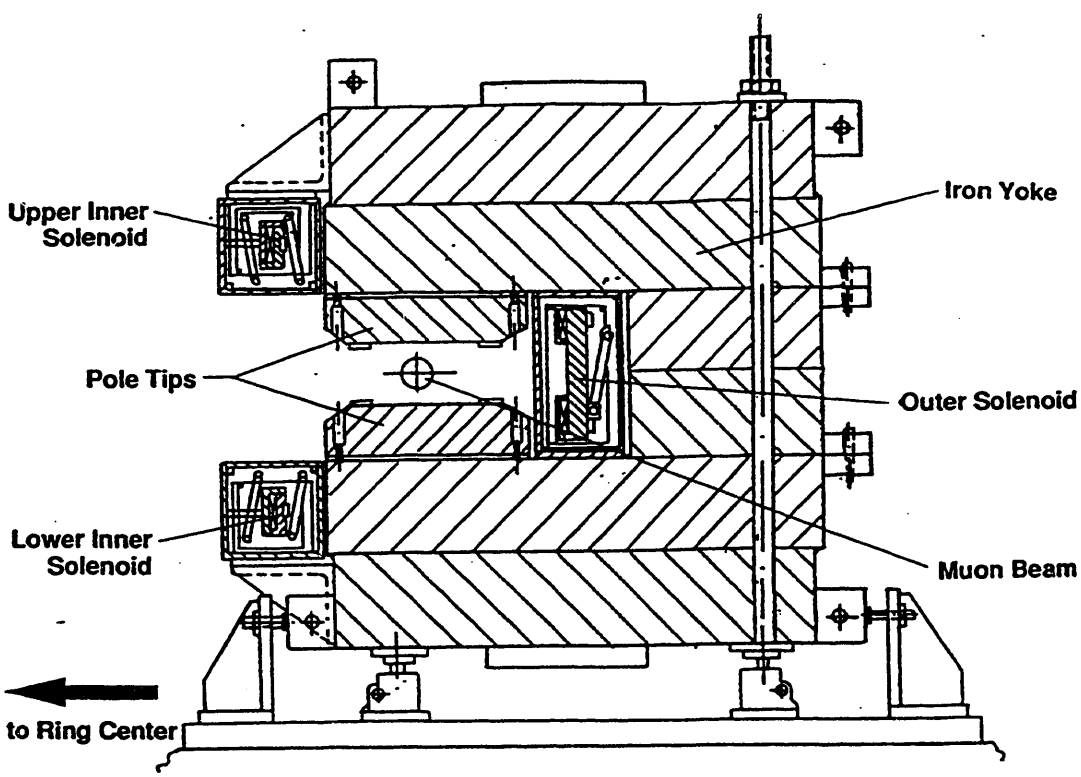

Fig. 1 A Cross-section view of the g-2 storage ring showing the three large solenoids

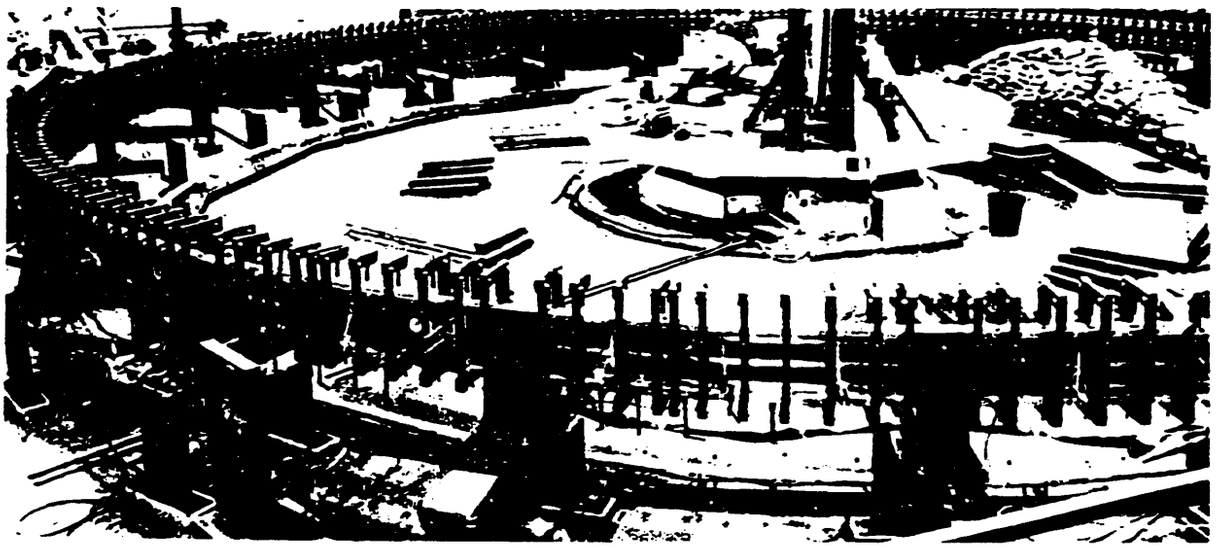

Fig. 2 The 15.1 meter diameter g-2 outer solenoid at the completion of winding

solenoids and the inflector magnet can be cooled from room temperature to 4.4 K in just under two days. The available cooling from the g-2 refrigerator far exceeds the cooling that is required to keep the magnets cold and supply gas to a pair of 5300 A gas cooled leads for the solenoids and a pair of 2850 A gas cooled leads for the superconducting inflector magnet.

The g-2 magnet cooling circuit is similar to the cooling circuit used to cool the PEP-4 solenoid built by LBL [5,6]. A mixture of liquid helium and helium gas from the refrigerator J-T valves is passed through a heat exchanger in a 500 liter control dewar filled with liquid helium. The two-phase mixture of liquid helium and gas coming back from the solenoid string is dumped back into the control dewar where phase separation occurs. Cold gas at 4.4 K is returned to the refrigerator J-T heat exchanger through the refrigerator cold return system. Two phase cooling with a control dewar and its heat exchanger has the following advantages: 1) the maximum operating temperature in the superconducting coils is lower for two phase cooling than for a single phase cooling; 2) for a given cooling rate, the mass flow is minimized; 3) no helium pump is required to circulate the helium; 4) the heat exchanger shifts the two phase helium from the gas side of the two phase dome to the liquid side of the dome reducing the flow circuit pressure drop by a factor of two; 5) two phase flow will be maintained in the cooling circuit when the heat load is as high as 150 percent of the refrigerator capacity as long as the heat exchanger in the control dewar is covered by liquid helium; and 6) the use of a control dewar plus the heat exchanger damps out potential flow oscillations often associated with two-phase flow.

The g-2 magnet two-phase helium cooling system has three parallel flow circuits for the solenoid coils, the leads between the solenoid coils and the inflector and its leads. During all phases of the flow system operation, the solenoid coil cooling circuits carries most of the helium flow. The helium flow circuit for the magnets is designed for the following operations [7]; 1) solenoid cool down from 300 K to 90 K with a set inlet temperature to the solenoid string, 2) solenoid cool down from 90 K to 10 K, 3) solenoid cool down below 10 K, 4) operation of the solenoid coils with the inflector at room temperature, 5) inflector cool down to 12 K with controlled inlet temperature while the solenoid coils are kept at 4.5 K, 6) inflector temperature is held at 12 K while the solenoids are cold and operating, 7) simultaneous operation of the solenoids and the inflector at 4.5 K, and 8) warm up of all of the magnets from 4.5 K to room temperature. The return side of the control dewar and the refrigerator are completely by-passed during the solenoid cool down to 10 K. The return gas that flows from the inflector during its cool down is also by-passed around the control dewar and refrigerator return. The estimated cool down time for all of the solenoids is less than 2 days [8]. The inflector, which has a cold mass of about 50 kg, can be cooled down in a few hours.

The pressure drops in the flow circuit start out at about 0.6 MPa when 15 g s^{-1} flows through the cooling circuit at room temperature. When the magnets are operated cold, the pressure drop is estimated to be about 0.013 MPa when the mass flow through the refrigerator J-T valve is 30 g s^{-1}. The highest temperature in the helium flow circuit will be less than 4.5 K when the refrigerator is delivering 225 W of refrigeration plus 0.9 g s^{-1} of cold gas to the leads.

IV. SOLENOID MAGNET POWER SUPPLY AND QUENCH PROTECTION SYSTEM

The g-2 solenoids operate at a design current of 5300 A. The power supply and the solenoids are designed for continuous 5830 A operation. The maximum charging rate

for the solenoids is controlled by the eddy currents induced in the mandrels. Based on a self inductance of 0.39 H, the 5 V power supply permits the g-2 solenoids to be charged in 900 s, but the magnet should be charged at a slower rate because of eddy currents in the iron. The charging and discharging history of the solenoids is important from the standpoint of field uniformity in the region of the stored muon beam. Fast charging and discharging of the g-2 solenoids will affect the magnetization of the yoke and pole piece steel. It is important that the magnet be charged in the same way each time a field change is made. Some time (several hours) is required for the eddy currents to decay in the yoke and poles before muons can be stored in the ring.

The solenoids are self protecting from a quench stand point. At full current a single coil will quench completely in about 5 seconds. The 5.5 MJ stored energy can be dumped in that coil without raising its temperature above 120 K. Once one of the coils turns normal, the rest of the coils will turn normal by quench back from resistive heating in the coil mandrels [9]. There is a 0.01 ohm dump resistor that induces quench back in the solenoids. As a result, the quench hot spot temperature is about 60 K. In addition, the dump resistor extracts 62 percent of the g-2 solenoid stored energy. At the end of the quench, the average temperature of the g-2 solenoids is about 38 K.

V. CONCLUSION

The g-2 solenoid magnet has three of the largest diameter superconducting solenoids ever built. The solenoids were built using a standard ultra pure aluminum matrix Nb-Ti superconductor. The magnet, which is indirectly cooled, is very stable for an epoxy impregnated superconducting magnet. The g-2 solenoids are cooled with a forced two-phase helium cooling system that is similar to the cooling systems used in most of the world's large detector magnets. The projected operating temperature of the g-2 cooling system is about 4.5 K. The peak temperature in the solenoid coils is expected to be less than 5.0 K. The g-2 solenoid magnet system will be powered by 33 kW power supply. The g-2 solenoids are expected to be self protecting during a quench, but a dump resistor may be used to control the solenoid quench process and extract about sixty percent of the stored magnetic energy from the solenoids. As of October 1993, the three large superconducting solenoids have been fabricated and installed in their cryostats.

VI. ACKNOWLEDGMENT

The g-2 Collaboration consists of the following people: E. Benedict, D. H. Brown, R. M. Carey, E. S. Hazen, F. Krienen, Z. Lui, J. P. Miller, J. Ouyand, B. L. Roberts, Boston Univeristy, Boston MA, USA; J. Benante, G. Bennett, H. N. Brown, G. Bunce, J. Cullen Jr., G. T. Danby, J. Geller, H-C. Hseuh, T. W. Jackson, L. X. Jia, R. Larsen, Y. Y. Lee, S. Mane, R. Meier, W. Meng, W. M. Morse, C. Pai, I Polk, A. Prodell, J. Sandberg, Y. Semertzidis, R. Shutt, L Snydrstrup, A. Soukas, A. Stillman, T. Tallerico, F. Toldo, K. Woodle, Brookhaven National Laboratory, Upton, NY. USA; L. M. Barkov, D. N. Grigorev, B. I. Khazin, E. A. Kuraev, Yu. M. Shatunov, E. Solodov, Budker Institute for Nuclear Physics, Novosibirsk, Russia; T. Kinoshita, Y. Orlov, Cornell University, Ithaca, NY, USA; D. Winn, Fairfield University, CT. USA; K. Jungmann, R. Prigl, G. zu Putlitz, University of Heidelberg, Heidelberg, Germany; P. T. Debevec, G. Garino, P. G. Harris, D. W. Hertzog, T. Jones, University of Illinois, Urbana, IL. USA; M. A. Green, Lawrence Berkeley Laboratory, Berkeley, CA. USA; W. P. Lysenko, Los Alamos National Laboratory, Los Alamos, NM. USA; U. Haeberlen, Max Planck Institute fur Med. Forschung, Heidelberg, Germany; P. Cushman, University of Minnesota, Minneapolis , MN. USA; K. Endo, H. Hirabayashi, I. Ichii, S. Kurokawa, Y. Mizumachi, T. Sato, A. Yamamoto, National Laboratory for High Energy Physics, KEK, Japan; K. Ishida, Riken Institute, Japan; K. Nagamine, University of Tokyo, Tokyo, Japan; S. Dhawan, A. A. Disco, F. J. M. Farley, X. Fei, V. Hughes, S. Redin, and Q. Xu, Yale University, New Haven, CT. USA

We acknowledge the design contributions of Z. Armoza, M. Tartakovsky, Z. Twardowski and the technical contributions of J Domiano, S. Kochis and D. von Lintig Jr.

This work was supported by the Office of Basic Energy Science, United States Department of Energy under the Brookhaven National Laboratory contract number DE-AC02-76CH00016.

REFERENCES

[1] "Muon g-2 design report," Brookhaven National Laboratory, Associated Universities Inc., Upton NY. 11973, AGS 821, July 1992

[2] J. Bailey et al., *Nucl. Phys.*B150, 1 (1979)

[3] F. J. M. Farley and E. Picasso, *Quantum Electrodynamics* ed. by T. Kinoshita, p 149, World Scientific, Singapore, 1990

[4] M. A. Green, "Design parameters for the g-2 solenoid power supply and quench protection system," BNL g-2 note 159, LBL report LBID-1950, 28 May 1993

[5] W. A. Burns, et. al., "Operation of a forced two phase cooling system on a large superconducting magnet," *Proceedings of the ICEC-8 Conference*, Genova, p 383, Butterworth Press, Oxford UK, 1980

[6] M. A. Green, et. al., "Cryogenic testing of the TPC superconducting solenoid," LBL report LBL-16217 UC-20b, June 1983

[7] M. A. Green, "Design parameters for the g-2 solenoid and inflector magnet two phase cooling system," BNL g-2 note 154, LBL report LBID-1944, 29 April 1993

[8] M. A. Green, "Cryogenics systems options for the g-2 superconducting solenoid magnet system," BNL g-2 note 142, LBL report LBID-1926, 26 Jan. 1993

[9] M. A. Green, *Cryogenics* 24, p 659, (1984)

END

DATE
FILMED
3/7/94