Conf-910968--52

GA–A20632

DEC 24 1991

110 GHz ECH ON DIII–D: SYSTEM OVERVIEW AND INITIAL OPERATION

by

W.P. CARY, J.C. ALLEN, R.W. CALLIS,
J.L. DOANE, T.E. HARRIS, C.P. MOELLER,
A. NEREM, R. PRATER, and D. REMSEN

NOVEMBER 1991

GENERAL ATOMICS

DISTRIBUTION OF THIS DOCUMENT IS UNLIMITED

DISCLAIMER

This report was prepared as an account of work sponsored by an agency of the United States Government. Neither the United States Government nor any agency thereof, nor any of their employees, makes any warranty, express or implied, or assumes any legal liability or responsibility for the accuracy, completeness, or usefulness of any information, apparatus, product, or process disclosed, or represents that its use would not infringe privately owned rights. Reference herein to any specific commercial product, process, or service by trade name, trademark, manufacturer, or otherwise, does not necessarily constitute or imply its endorsement, recommendation, or favoring by the United States Government or any agency thereof. The views and opinions of authors expressed herein do not necessarily state or reflect those of the United States Government or any agency thereof.

GA-A--20632

DE92 004293

110 GHz ECH ON DIII–D: SYSTEM OVERVIEW AND INITIAL OPERATION

by

W.P. CARY, J.C. ALLEN, R.W. CALLIS, J.L. DOANE, T.E. HARRIS, C.P. MOELLER, A. NEREM, R. PRATER, and D. REMSEN

This is a preprint of a paper to be presented at the 14th Symposium on Fusion Engineering, September 30–October 3, 1991, San Diego, California, and to be printed in the *Proceedings*.

Work supported by
Department of Energy
Contract DE-AC03-89ER51114

GENERAL ATOMICS PROJECT 3466
NOVEMBER 1991

GENERAL ATOMICS

MASTER

DISTRIBUTION OF THIS DOCUMENT IS UNLIMITED

110 GHz ECH ON DIII–D: SYSTEM OVERVIEW AND INITIAL OPERATION

W.P. Cary, J.C. Allen, R.W. Callis, J.L. Doane,
T.E. Harris, C.P. Moeller, A. Nerem, R. Prater, and D. Remsen
General Atomics
P.O. Box 85608
San Diego, California 92186-9784

Abstract: A new high power electron cyclotron heating (ECH) system has been introduced on DIII–D. This system is designed to operate at 110 GHz with a total output power of 2 MW. The system consists of four Varian VGT-8011 gyrotrons, (output power of 500 kW), and their associated support equipment. All components have been designed for up to a 10 second pulse duration.

The 110 GHz system is intended to further progress in rf current drive experiments on DIII–D when used in conjunction with the existing 60 GHz ECH (1.6 MW), and the 30–60 MHz ICH (2 MW) systems. H–mode physics, plasma stabilization experiments and transport studies are also to be conducted at 110 GHz.

The present system design philosophy was based on experience gained from the existing 60 GHz ECH system. The consequences of these design decisions will be addressed as will the actual performance of various 110 GHz components.

System Overview

The 110 GHz ECH system consists of eight major components as shown in Fig. 1. Each component plays its own critical role in the operation and delivery of the 500 kW into a DIII–D plasma. To date one of the four gyrotron systems has been operated at short pulse length into DIII–D. All major components except for the Varian VGT-8011 gyrotron were either designed or modified by General Atomics for specific use in this system.

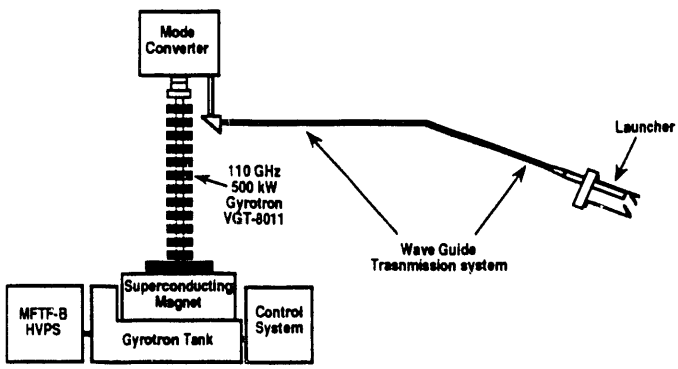

Fig. 1. The 110 GHz ECH System

High Voltage Power Supply

A neutral beam power supply originally purchased for the MFTF-B project at LLNL was modified to supply the required −80 kV dc. Each of these supplies is capable of supplying 80 A at 80 kV dc which should be sufficient to operate four gyrotrons, assuming a 30% or better efficiency from the gyrotron. This supply is currently also being used for the 60 GHz ECH system which consists of eight Varian VGT-8006 200 kW gyrotrons. The power supply was not only modified to operate with negative polarity but also to be controlled by a DEC MicroVaxII running software developed by VISTA Systems and modified by GA. Extensive work has been done to maximize the stability and regulation characteristics of the supply to meet the demanding requirements of the VGT-8011 gyrotron.

Varian VGT-8011 Gyrotron

Under a DOE/GA contract Varian Microwave Power Tube Products has developed the VGT-8011 Gyrotron. This gyrotron is currently designed to operate with a minimum power output of 500 kW for a 10 second pulse in the $TE_{15,2}$ mode at 110 GHz with an efficiency of ≥30%. Varian is also developing a 1 MW CW 110 GHz gyrotron. Due to the high power density of the collector, 13 coils are required on the collector to assure a uniform heat loading. The following are the rough operating specifications for the VGT-8011.

Cathode E	−80 kV dc
Cathode I	~ 20 A
Gun E	~23.5 kV dc ±200 V dc
Heater E	~52 V ac
Heater I	~5.5 A

Superconducting Magnets

Gyrotrons require a combination of very high magnetic fields along with precise shape and uniformity of these fields. The prohibitively large size of conventional copper magnets coupled with the large space and power needs of their energizing power supplies, imposes that the only practical way to generate these fields is by using superconducting magnets. The design of these magnets needs to not only produce the desired fields, but must also be mechanically and thermally designed for low boil off of LHe while maintaining mechanical rigidity.

The first two gyrotron systems will use magnets designed and built by GA, while the remaining systems will use magnets built by Oxford Instruments Limited. The operating currents for the first system are listed below.

Collector Coil	0-25 A
Upper Main Coil	0-15 A
Lower Main Coil	0-25 A
Gun Coil	0-7.5 A

Tank and Control

The tank and control system supply the necessary support functions to make the gyrotron operate in a predictable and orderly fashion. The tank is divided into two compartments which are filled with transformer oil at two different levels. Due to height restrictions the portion of the tank which supports the magnet and gyrotron had to be made with as low a profile as possible. This section contains the cathode and gun voltage dividers, heater transformer and the gun oil pump. Signals from this section are connected to the tall section via high voltage oil tight bushings. The tall section contains the gun anode voltage regulator, and various monitoring/telemetry components. A unique feature of the 110 GHz system when compared to the older 60 GHz system is the exclusive use of fiber optic telemetry

links between the tank/vault and the control room. This was felt necessary due to our experience with noise problems associated with spark downs in the gyrotron tanks with the 60 GHz system. To accomplish this there are 13 voltage-to-frequency and frequency-to-voltage links used for both control and monitoring. These links have a 3 dB bandwidth of 1 MHz with a carrier frequency of 9 MHz. A multichannel first fault system was developed to handle the slower interlock type functions. This system can handle up to 63 inputs and transmit this information over three optical cables to present the operator a two digit read out of the fault. As part of the superconducting magnet control an eight channel 16 bit bidirectional data link was designed [1]. This link is tied to the control room via four optical cables which enables remote programming and monitoring of the magnet currents to within 1 mA. Another new feature with the 110 GHz system is the use of a heater/cathode current regulation circuit [2]. This circuit maintains the proper cathode current by adjusting the heater voltage dynamically during the actual rf pulse. The system was designed from the beginning to be computer controlled with similar software as used in the MFTF-B high voltage power supply (HVPS) system, but to date has been totally hardware controlled. It is hoped that the software will be able to do near real time display of a few select signals when in the conditioning mode (short pulse at 0.5 Hz rep rate) and to handle a much larger database during normal shot mode.

As an initial design requirement to do transport studies, modulation of the gun anode at up to a 20 kHz rate was designed into the system. This is accomplished using two TH-5188 tetrodes to switch the gun on and off (Fig. 2). The on-tube is also a series regulator giving a range of from 0 to 30 kV dc on the gun while the off-tube is designed to act as a switch to bring the gun to the same voltage potential as the cathode (−2.5 kV dc) within 20 μs.

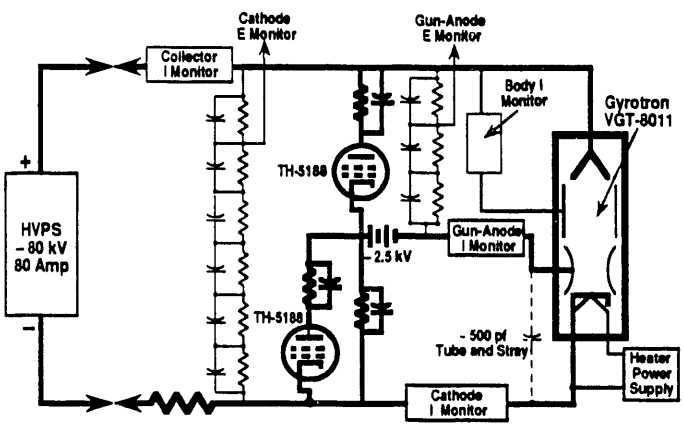

Fig. 2. Gyrotron/gun-anode regulator (push-pull)

Transmission and Mode Conversion

The rf transmission system is comprised of three major areas as outlined in Fig. 3. The first area is comprised of the mode converter. This converter was developed by GA using a novel approach taking the helically traveling $HE_{15,2}$ mode and converting it to coaxial $TE_{15,2}$ and $TM_{15,1}$ modes [3]. These modes are then converted to TE_{10} mode and later to rectangular waveguide HE_{11} mode through an E-plane taper for coupling into circular waveguide in the HE_{11} mode. The circular HE_{11} mode transmitted through 1.25 in. i.d. corrugated waveguide which is manufactured by GA using a unique machining process. A direct machining process is used on aluminum tube in 7 ft lengths. The sections are joined together using helicoflex seals and a simple sleeve/snap ring arrangement. This technique allows for field assembly and disassembly without any special tools or welding. The entire transmission system from the gyrotron output window to DIII–D is evacuated to $<10^{-6}$ torr. The low pressure combined with the very high frequency result in a high power handling capability in a small waveguide. Since there is no window at the machine precautions must be taken to assure that a catastrophic failure of the gyrotron output window does not allow the window cooling FC-75 to contaminate DIII–D. It has been determined that since the conduction path through the waveguide is so poor that by monitoring the pressure at the mode converter and using it to control a fast acting shutter valve close to the machine, the tokamak vacuum will be adequately protected. A slower acting machine isolation valve is also actuated upon pressure rise at the mode converter to assure total isolation.

The HE_{11} wave is launched into the plasma via a quasi-optical type launcher. The launcher primarily consists of two mirrors. A fixed mirror at the waveguide end is a paraboloid of revolution which slightly focuses the beam radiating in the HE_{11} mode. A flat rotatable mirror is used for poloidal positioning, offering a relatively large plasma cross section of targeting. The tools or welding. The entire transmission system from the gyrotron output window to DIII–D is evacuated to $<10^{-6}$ torr. The low pressure combined with the very high frequency result in a high power handling capability in a small waveguide. Since there is no window at the machine precautions must be taken to assure that a catastrophic failure of the gyrotron output window does not allow the window cooling FC-75 to contaminate DIII–D. It has been determined that since the conduction path through the waveguide is so poor that by monitoring the pressure at the mode converter and using it to control a fast acting shutter valve close to the machine, the tokamak vacuum will be adequately protected. A slower acting machine isolation valve is also actuated upon pressure rise at the mode converter to assure total isolation.

The HE_{11} wave is launched into the plasma via a quasi-optical type launcher. The launcher primarily consists of two mirrors. A fixed mirror at the waveguide end is a paraboloid of revolution which slightly focuses the beam radiating in the HE_{11} mode. A flat rotatable mirror is used for poloidal positioning, offering a relatively large plasma cross section of targeting. The mirror is also capable of toroidal rotation but will require a machine vent to exercise this option.

Initial Operation

Initial operation of the first gyrotron system took place at GA in June of 1991 with successful operation of the gyrotron into dummy load at 527 kW for 2 ms at 110.15 GHz. A collector temperature profile was determined at this point and the collector spreading magnets were adjusted for a uniform deposition of the heat. Schedule demands dictated that instead of working on extending the pulse length that the mode converter and other wave guide components be installed to verify their power handling capabilities. The mode converter was first tested into a dummy load with only a small amount of waveguide connected. A small change in operating frequency along with minor magnetic changes for proper operation were noted after adding the mode converter to the gyrotron. Some questions concerning the direction of the rf rotation had been expressed, so a test fixture was designed and installed. Tests were conducted to determine the rotation of the rf and to see if it can be effected by changes in the magnetic fields. These tests showed that >99% of the rf was in the expected direction of rotation. No changes in rotation were noticed when the magnetic fields were changed over the operating range of the gyrotron. The remainder of the transmission system was connected and rf was successfully injected into the DIII–D vacuum vessel. At present there is no quantitative information available as to the coupled power delivered into DIII–D, nor the overall efficiency of the system at high power

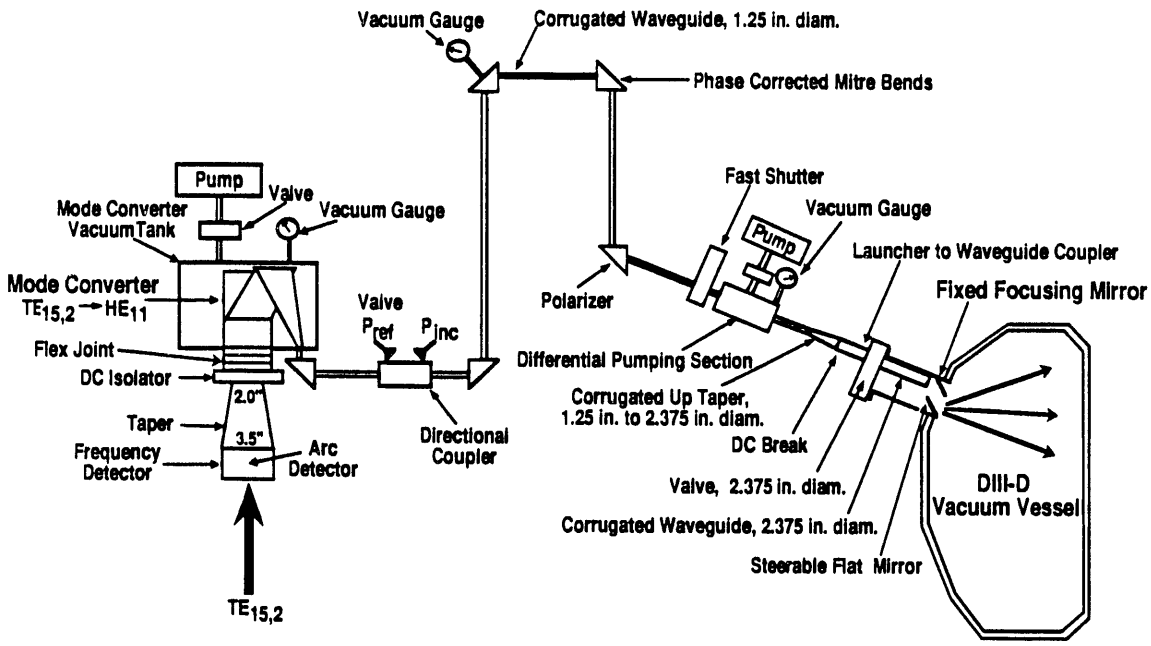

Fig. 3. Transmission and mode conversion

levels. It should be noted that low power testing of the various components showed very promising results as shown below:

Component Efficiencies at Low Power [4]

Mode converter	>95%
Waveguide section (10 meter)	>99.5%
Mitre bends	≥99%

Further testing is planned to verify the overall rf efficiency of the transmission/converter system. All testing to date has been conducted at pulse lengths of ≤2.5 ms at a rep rate of 2 Hz or less.

Acknowledgement

This work was sponsored by the U.S. Department of Energy under Contract No. DE-AC03-89ER51114.

References

[1] J. Allen, "Eight Channel — 16 Bit, Bidirectional Analog to Digital Monitoring and Control System," this conference.

[2] T. Harris, "Active Heater Control and Regulation for the Varian VA-8011 Gyrotron," this conference.

[3] C.P. Moeller, "Compact Waveguide Converter Apparatus," U.S. Patent Application filed January 9, 1990.

[4] C.P. Moeller, "110 GHz ECH System for DIII-D," to be published in the Proc. of 18th European Conf. on Controlled Fusion and Plasma Heating, Berlin, Germany, 1991.

END

DATE
FILMED
01/30/92

I