Roosevelt approved in June 1940 the establishment of a voice for the scientific community within the executive branch. The National Defense Research Committee, with Bush at its head, reorganized the Uranium Committee into a scientific body and eliminated military membership. Not dependent on the military for funds, as the Uranium Committee had been, the National Defense Research Committee would have more influence and more direct access to money for nuclear research. In the interest of security, Bush barred foreign-born scientists from committee membership and blocked the further publication of articles on uranium research. Retaining programmatic responsibilities for uranium research in the new organizational setup (among the National Defense Research Committee's early priorities were studies on radar, proximity fuzes, and anti-submarine warfare), the Uranium Committee recommended that isotope separation methods and the chain reaction work continue to receive funding for the remainder of 1940. Bush approved the plan and allocated the funds.

A Push From Lawrence

During 1939 and 1940 most of the work done on isotope separation and the chain reaction pile was performed in university laboratories by academic scientists funded primarily by private foundations. While the federal government began supporting uranium research in 1940, the pace appeared too leisurely to the scientific community and failed to convince scientists that their work was of high priority. Certainly few were more inclined to this view than Ernest O. Lawrence, director of the Radiation Laboratory at the University of California in Berkeley. Lawrence was among those who thought that it was merely a matter of time before the United States was drawn into World War II, and he wanted the government to mobilize its scientific forces as rapidly as possible.

Specifically what Lawrence had on his mind in early 1941 were experiments taking place in his own laboratory using samples produced in the cyclotron. Studies on uranium fission fragments by Edwin M. McMillan and Philip H. Abelson led to the chemical identification of element 93, neptunium, while research by Glenn T. Seaborg revealed that an isotope of neptunium decayed to yet another transuranium (man-made) element. In February, Seaborg identified this as element 94, which he later named plutonium. By May he had proven that plutonium-239 was 1.7 times as likely as uranium-235 to fission. This finding made the Fermi-Szilard experiment more important than ever

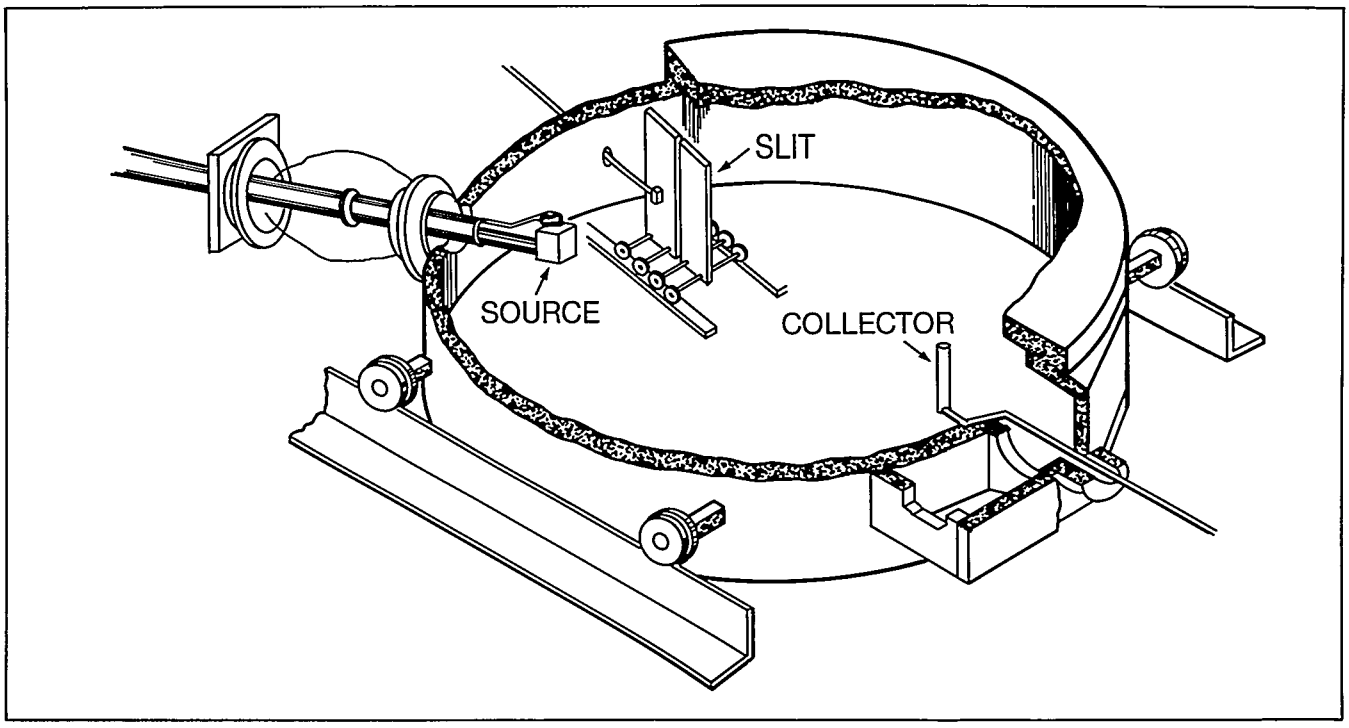

First Mass Spectrograph Components in 37-Inch Cyclotron Tank. Reprinted from Richard G. Hewlett and Oscar E. Anderson, Jr., *The New World, 1939-1946,* Volume I of *A History of the United States Atomic Energy Commission* (University Park: Pennsylvania State University Press, 1962).