Membrane Separation in the Sweetener Industry

The dewatering of waste streams is the most energy-intensive process in the corn sweetener industry. Industry wide, about 5 billion gallons of steep water must be concentrated each year using energy-intensive evaporators which consume 5 trillion Btu per year. With DOE support, an energy-efficient membrane system has been developed by Bend Research Corporation to preconcentrate corn steep water using an improved hollow fiber membrane design. The process employs reverse osmosis, leaving a concentrated solution of organic compounds such as sugars on the feed side of the membrane. The technology for the process has been tested at a Midwestern corn milling plant. The system is capable of extracting over 50 percent of the water from the corn steep stream prior to evaporation, significantly reducing energy requirements. Compared to a conventional mechanical vapor recompression (MVR) system, the membrane distillation process combined with an MVR evaporator provides a capital cost savings of 13.5 percent and an operating cost savings of 20 percent. Projected savings in the year 2010 are estimated at 4.5 trillion Btu per year.

Oxygen Production by Chemical Air Separation

Industrial oxygen is used in thermal processes at metal, chemical, and utility plants. Currently, it is produced by the cryogenic process in which air is compressed, liquefied, and distilled into its components. This process is energy-intensive because thermal energy must be converted to the mechanical energy that compresses air, with an energy loss of about 66 percent. Typically, about 2000 Btus are used to produce each pound of oxygen. With DOE cost-sharing, Air Products & Chemicals Incorporated is developing a process, invented by Energy Concepts Company, to produce oxygen with 40 percent less energy consumption and 15 to 25 percent lower overall costs than current cryogenic processes. The chemical air separation process produces oxygen of 99.8 percent purity. Thermal energy can be conveniently supplied from high-temperature plant waste heat. Potential applications include use in the production of steel, nonferrous metals, and chemicals. Operation of the process has been demonstrated in a quarter-ton per day process development unit. Energy costs are reduced by up to 40 percent for a thermal swing chemical air separation process that is integrated with a steam

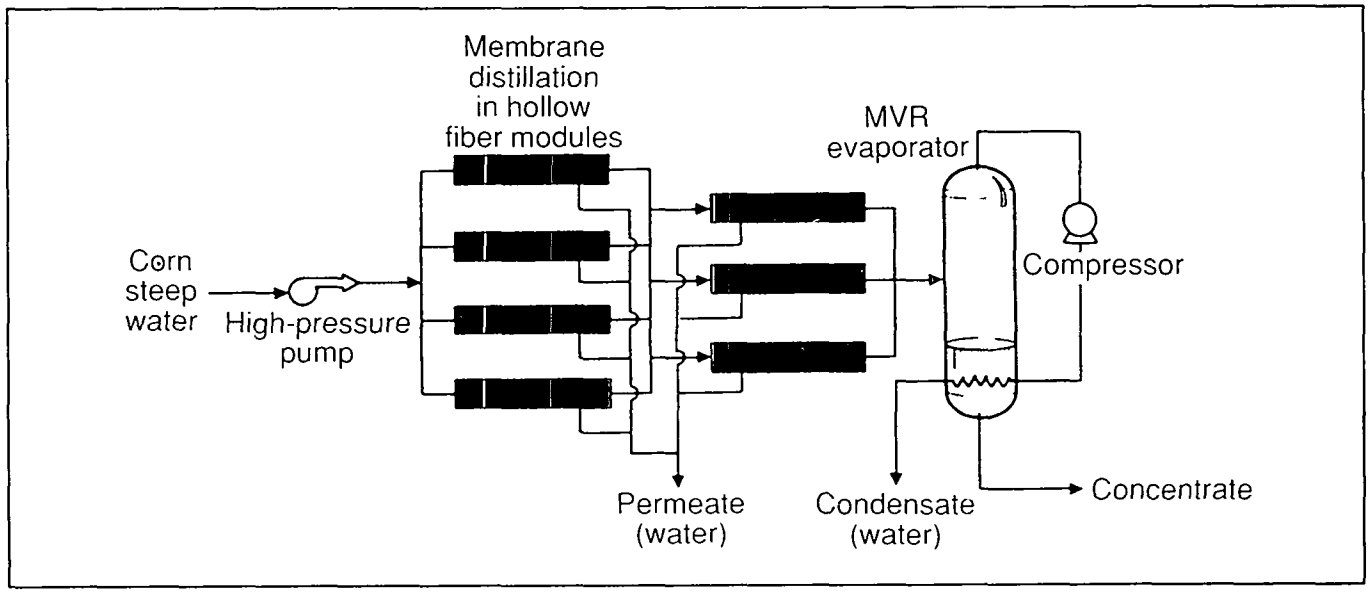

Membrane distillation in hollow fiber membrane modules can significantly reduce the energy requirements for conventional MVR evaporation of corn steep water.